SHANGHAI GUANGLU MOTOR CO.,LTD
Add: NO.388 Xinyu Rd,Songjiang , Shanghai, China.
Tel: 86-21-57735599 57735886
Fax: 86-21-57735500
Http: //www.guanglu.com
E-mail: guanglu@guanglu.com

CHINA·GUANGLU ELECTRICAL CO.,LTD
Add: Shanshi Ind.Zone,Wenling,Zhejiang pr.China
Tel: 86-576-86389888
Fax: 86-576-86388181
Export:86-576-86381188 86383600
Http: //www.guanglu.com
E-mail: guanglu@guanglu.com

Free Of Charge 400-885-9288

The information provided in this catalogue contains descriptions or characteristics of performance which is case of actual use do not always apply as described or which may change as a result of further development of the products. An obligation to provide the respective characteristics shall only exist if expressly agreed in the terms of contract. Availability and technical specifications are subject to change without notice.

GUANGLU

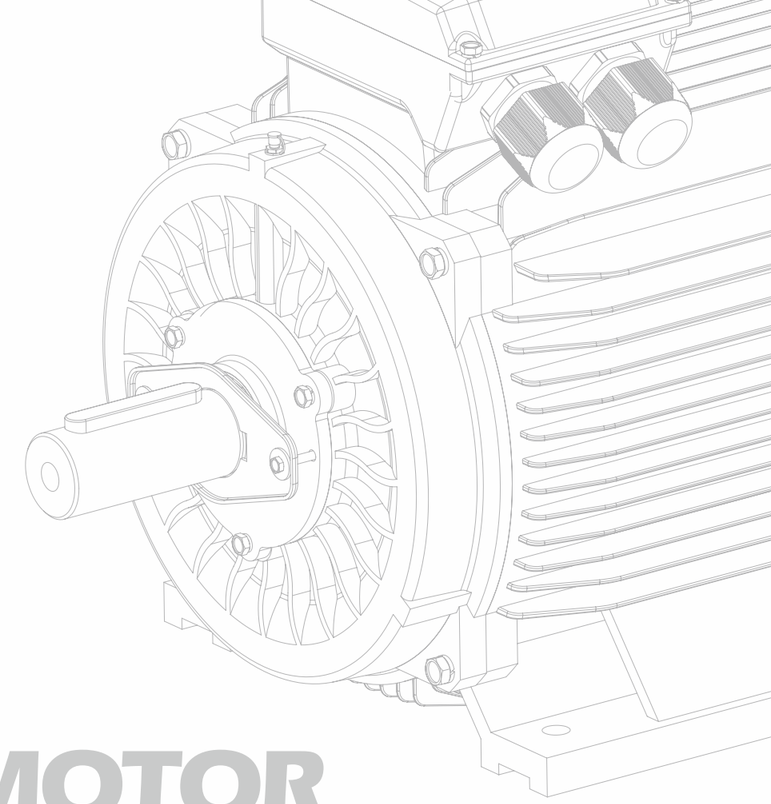

IE3

SERIES MOTOR

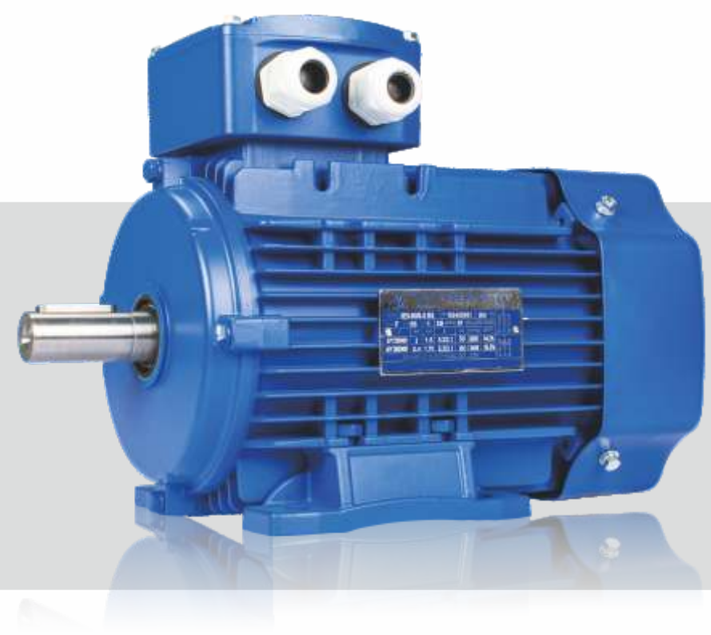

BRIEF INTRODUCTION

Located in ShanShi Industrial park of Taizhou City,border on the picturesque scenery East China Sea ,China · GuangLu Electrical Co., Ltd. Enjoys convenient transportation by water ,land and air. The company occupies 25 thousand square meters and owns advanced producing equipments, it is a company specialized in electrical machinery manufacturing with all kinds of classifications, it is a member of Small and Medium–Sized Enterprises Electrical motor factory in the whole nation, it is a cooperated company with ShangHai Testing & Inspection. Institute .

Our company was established in 80′ s, it was listed in the important industry member of key enterprise factory in WenLing, it is in the front of fifth strongest factory in DaXi. Furthermore, the company own excellent staff and a powerful scientific and technical system, advanced mode of production, hi–efficiency production facilities, continually renew testing equipments and consummate modernized management system. All products are according to the International IEC standard, it has arrived to the advanced level in the international same area. It has passed ISO9001:2000 International Quality Conformity, and got CCC 、CECP、CE Certificate, it is one of the biggest exported company in the Small and Medium Size in the Electrical area. In 2009,it was award ational Hi–Tech enterprise", YX3 series –high efficiency electrical motor has listed in the energy Conservation Project.

Guanglu company specially produce IE1 、 IE2 、 IE3 series,Gost standard motor , YX3 high efficiency motor，GM removeable single phase aluminium body motor,YZR3 series ,brake motor, double speed motor, vibrator motor，single phase series, Vibrators,high frequency vibrator stick，cutter, grinder ,etc. Guanglu products were sold to all over the world ,such as Europe, Middle East and our neighbors, the products are welcomed by customers and with favorable comments. In order to manufacture high quality products, Guanglu company introduced high efficiency producing lines and increased new machining centers,such as lathe, automatic high speed stamping system, microcomputer test center,Coordinate Measurement System,control strictly from material select,machining ,manufacture,,assembly to test, make the control system computerized and automated.

Guanglu make Science and technology as foremost,people oriented , improve quality constantly, most of products are superfine and high quality ,are saled with good reputation in domestic and overseas market.

Guanglu company pursuing improvement spirit , advancing innovate independently, speed up the adjustment for products' structure, develop high–tech products energetically, perfect the technology, operate in high efficiency, with positive attitude as enterprise's belief ,and serve customers with satisfied and excellence products and loyal service as the company tenet.

YESTERDAY
Tomorrow
Today
GUANGLU, step by step in the highest flight

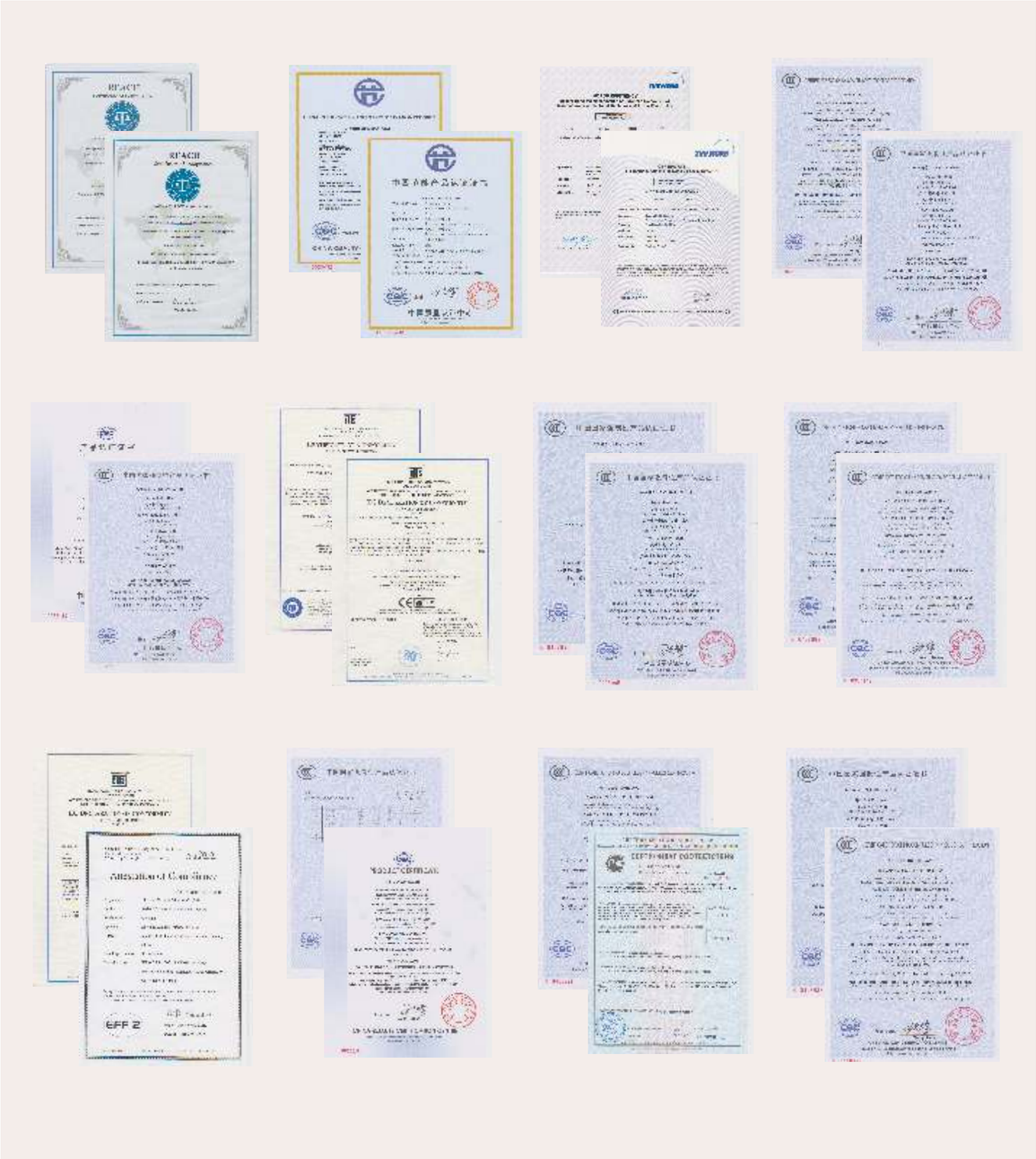

BEARING SIZE

Frame Size	Poles	Drive End	Non-Drive End
80	2~4	6204-2RZ	6204-2RZ
90	2~6	6205-2RZ	6205-2RZ
100	2~6	6206-2RZ	6206-2RZ
112	2~6	6306-2RZ	6306-2RZ
132	2~6	6308-2RZ	6308-2RZ
160	2~6	6309-2RZC3	6309-2RZC3
180	2~6	6311 C3	6311 C3
200	2~6	6312 C3	6312 C3
225	2~6	6313 C3	6313 C3
250	2~6	6314 C3	6314 C3
280	2	6314 C3	6314 C3
	4~6	6317 C3	6317 C3
315	2	6317 C3	6317 C3
	4~6	NU319 C3	6319 C3
355	2	6319 C3	6319 C3
	4~6	NU322 C3	NU322 C3

MAIN DATA FOR TERMINAL BOX

Classified number	Frame size	Max.F.Amps	Entery hole size
1	H80	2.6	2×M20×1.5
2	H90-100	6.8	2×M25×1.5
3	H112-132	15.4	2×M32×1.5
4	H160-180	42.5	2×M40×1.5
5	H200-225	84.2	2×M50×1.5
6	H250-280	166.6	2×M63×1.5
7	H315	358	2×M63×1.5
8	H355	546	2×M63×1.5

The mounting arrangements of the motors comply with IEC34–7 Recommendation. There are four basic arrangements shown as the following tables and figures.

Fundamental arrangement	B3					
Mounting arrangement	B3	B6	B7	B8	V5	V6
Diagram	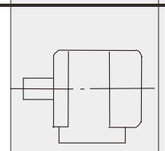	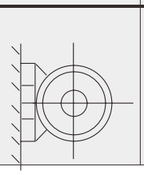	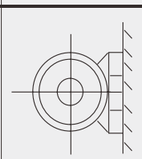	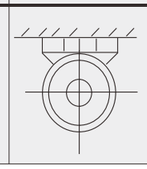	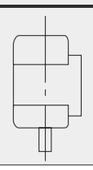	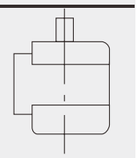
Range of Manufacture (framesize)	80-355	80-160				

Fundamental arrangement	B5			B35		
Mounting arrangement	B5	V1	V3	B35	V15	V36
Diagram	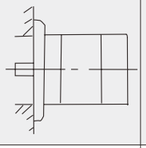	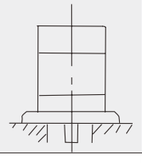	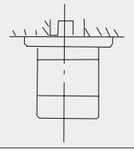	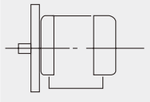	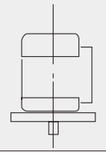	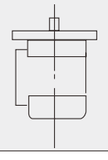
Range of Manufacture (framesize)	80-280	80-355	80-160	80-355	80-160	

Fundamental arrangement	B14					
Mounting arrangement	B14	B34	V18	V58	V19	V69
Diagram	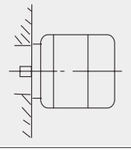	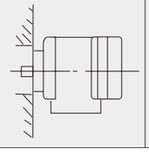	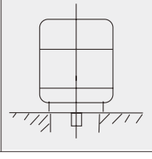	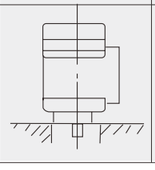		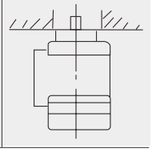
Range of Manufacture (framesize)	80-132					

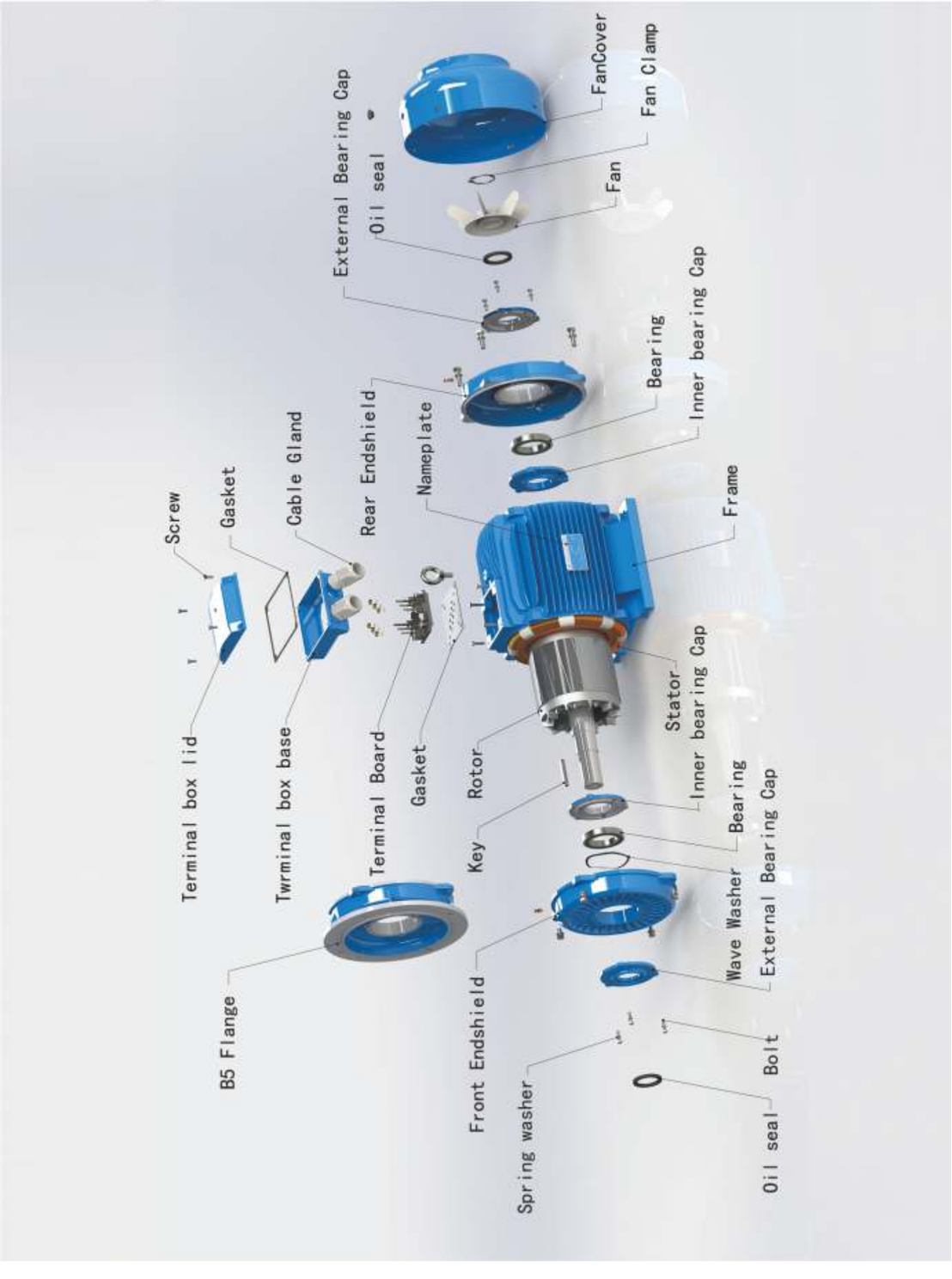

GUANGLU

ISO9001 Authentication by EC CE

IE3 THREE-PHASE ASYNCHRONOUS MOTOR

TECHNICAL DATA OF IE3 SERIES

	Franme reference and size	Rated power	Full load current at rated voltage			Full load sreed in revolutions per minute	Direct on ine starting torque ratio	Direct on linepull out torque ratio	Diect on linestarting current ratio	Efficiency	Power factor	Mean sound pressure level @1mon noload	Weight	Rotor inertia WK²
NO.	Type	Power	Amps (A)			Speed	LRT/RLT	BDT/RLT	LRA/RLA	η	Power factor	Noise	Weight	J
		kW	380V	400V	415V	r/min				(%)	(cosΦ)	LwdB(A)	kg	kgm²
1	IE3-80M1-2	0.75	1.72	1.64	1.58	2890	2.3	2.3	7	80.7	0.82	62	23	0.00109
2	IE3-80M2-2	1.1	2.43	2.31	2.23	2890	2.2	2.3	7.3	82.7	0.83	62	24	0.00142
3	IE3-90S-2	1.5	3.22	3.06	2.95	2890	2.2	2.3	7.6	84.2	0.84	67	26	0.00217
4	IE3-90L-2	2.2	4.58	4.35	4.19	2890	2.2	2.3	7.6	85.9	0.85	67	31	0.00283
5	IE3-100L-2	3	6.02	5.71	5.51	2895	2.2	2.3	7.8	87.1	0.87	74	39	0.00457
6	IE3-112M-2	4	7.84	7.45	7.18	2910	2.2	2.3	8.3	88.1	0.88	77	61	0.00631
7	IE3-132S1-2	5.5	10.65	10.11	9.75	2940	2.0	2.3	8.3	89.2	0.88	79	73	0.01392
8	IE3-132S2-2	7.5	14.37	13.65	13.16	2940	2.0	2.3	7.9	90.1	0.88	79	79	0.01643
9	IE3-160M1-2	11	20.59	19.56	18.85	2950	2.0	2.3	8.1	91.2	0.89	81	126	0.0540
10	IE3-160M2-2	15	27.86	26.47	25.51	2950	2.0	2.3	8.1	91.9	0.89	81	136	0.0618
11	IE3-160L-2	18.5	34.18	32.47	31.30	2950	2.0	2.3	8.2	92.4	0.89	81	161	0.0716
12	IE3-180M-2	22	40.52	38.49	37.10	2960	2.0	2.3	8.2	92.7	0.89	83	202	0.0892
13	IE3-200L1-2	30	54.89	52.15	50.26	2970	2.0	2.3	7.6	93.3	0.89	84	259	0.1800
14	IE3-200L2-2	37	67.41	64.04	61.73	2970	2.0	2.3	7.6	93.7	0.89	84	276	0.1900
15	IE3-225M-2	45	80.82	76.78	74.00	2970	2.0	2.3	7.7	94	0.9	86	359	0.3335
16	IE3-250M-2	55	98.46	93.54	90.16	2980	2.0	2.3	7.7	94.3	0.9	89	394	0.4638
17	IE3-280S-2	75	133.70	127.02	122.43	2980	1.8	2.3	7.1	94.7	0.9	91	537	1.0889
18	IE3-280M-2	90	159.94	151.94	146.45	2980	1.8	2.3	7.1	95	0.9	91	583	1.1487
19	IE3-315S-2	110	195.07	185.31	178.61	2980	1.8	2.3	7.1	95.2	0.9	92	861	1.495
20	IE3-315M-2	132	233.59	221.91	213.89	2980	1.8	2.3	7.14	95.4	0.9	92	948	2.111
21	IE3-315L1-2	160	279.44	265.47	255.87	2980	1.8	2.3	7.2	95.6	0.91	92	1020	2.394
22	IE3-315L2-2	200	348.57	331.14	319.17	2980	1.8	2.3	7.2	95.8	0.91	92	1112	2.654
23	IE3-355M-2	250	435.71	413.93	398.97	2980	1.6	2.2	7.2	95.8	0.91	100	1650	3.345
24	IE3-355L-2	315	549.00	521.55	502.70	2980	1.6	2.2	7.2	95.8	0.91	100	1843	3.903

TECHNICAL DATA OF IE3 SERIES

	Franme reference and size	Rated power	Full load current at rated voltage			Full load sreed in revolutions per minute	Direct on ine starting torque ratio	Direct on linepull out torque ratio	Diect on linestarting current ratio	Efficiency	Power factor	Mean sound pressure level @1mon noload	Weight	Rotor inertia WK²
NO.	Type	Power	Amps (A)			Speed	LRT/RLT	BDT/RLT	LRA/RLA	η	Power factor	Noise	Weight	J
		kW	380V	400V	415V	r/min				(%)	(cosΦ)	LwdB(A)	kg	kgm²
1	IE3-80M-4	0.75	1.75	1.64	1.69	1430	2.3	2.3	6.6	82.5	0.75	56	25	0.00270
2	IE3-90S-4	1.1	2.48	2.31	2.39	1440	2.3	2.3	6.8	84.1	0.76	59	26	0.00327
3	IE3-90L-4	1.5	3.30	3.06	3.18	1440	2.3	2.3	7	85.3	0.77	59	29	0.00414
4	IE3-100L1-4	2.2	4.52	4.35	4.36	1455	2.3	2.3	7.6	86.7	0.81	64	40	0.00837
5	IE3-100L2-4	3	6.02	5.71	5.80	1455	2.3	2.3	7.6	87.7	0.82	64	45	0.01012
6	IE3-112M-4	4	7.95	7.45	7.66	1460	2.2	2.3	7.8	88.6	0.82	65	61	0.01392
7	IE3-132-4	5.5	10.68	10.11	10.29	1470	2.0	2.3	7.9	89.6	0.83	71	84	0.03100
8	IE3-132M-4	7.5	14.26	13.65	13.74	1470	2.0	2.3	7.5	90.4	0.84	71	94	0.03982
9	IE3-160M-4	11	20.44	19.56	19.70	1470	2.0	2.3	7.7	91.4	0.85	73	136	0.0852
10	IE3-160L-4	15	27.34	26.47	26.35	1470	2.2	2.3	7.8	92.1	0.86	73	160	0.1116
11	IE3-180M-4	18.5	33.53	32.47	32.32	1475	2.0	2.3	7.8	92.6	0.86	76	195	0.1679
12	IE3-180L-4	22	39.70	38.49	38.27	1480	2.0	2.3	7.8	93	0.86	76	220	0.2065
13	IE3-200L-4	30	53.79	52.15	51.85	1485	2.0	2.3	7.8	93.6	0.86	76	278	0.3147
14	IE3-225S-4	37	66.13	64.04	63.74	1485	2.0	2.3	7.4	93.9	0.86	78	343	0.5224
15	IE3-225M-4	45	80.18	76.78	77.28	1485	2.0	2.3	7.4	94.2	0.86	78	373	0.6118
16	IE3-250M-4	55	97.58	93.54	94.05	1485	2.0	2.3	7.4	94.6	0.86	79	433	0.8294
17	IE3-280S-4	75	129.49	127.02	124.81	1485	2.0	2.3	6.9	95	0.88	80	600	2.1199
18	IE3-280M-4	90	155.07	151.94	149.46	1485	2.0	2.3	6.9	95.2	0.88	80	683	2.5634
19	IE3-315S-4	110	187.00	185.31	180.24	1485	2.0	2.2	7	95.4	0.89	88	922	3.626
20	IE3-315M-4	132	223.93	221.91	215.84	1485	2.0	2.2	7	95.6	0.89	88	1020	4.210
21	IE3-315L1-4	160	270.87	265.47	261.08	1485	2.0	2.2	7.1	95.8	0.89	88	1120	4.605
22	IE3-315L2-4	200	334.12	331.14	322.05	1485	2.0	2.2	7.1	96	0.9	88	1194	5.274
23	IE3-355M-4	250	417.66	413.93	402.56	1490	2.0	2.2	7.1	96	0.9	95	1630	7.248
24	IE3-355L-4	315	526.25	521.55	507.23	1490	2.0	2.2	7.1	96	0.9	95	1780	9.143

TECHNICAL DATA OF IE3 SERIES

	Franme reference and size	Rated power	Full load current at rated voltage			Full load sreed in revolutions per minute	Direct on ine starting torque ratio	Direct on linepull out torque ratio	Diect on linestarting current ratio	Efficiency	Power factor	Mean sound pressure level @1mon noload	Weight	Rotor inertia WK²
NO.	Type	Power	Amps (A)			Speed	LRT/RLT	BDT/RLT	LRA/RLA	η	Power factor	Noise	Weight	J
		kW	380V	400V	415V	r/min				(%)	(cosΦ)	LwdB(A)	kg	kgm²
1	IE3-80M1-6	0.37	1.1	1.0	1.0	880	1.9	2.0	4.7	73.5	0.7	54	17.5	0.00181
2	IE3-80M2-6	0.55	1.5	1.4	1.4	880	1.9	2.1	4.7	77.2	0.72	54	18.5	0.00215
3	IE3-90S-6	0.75	2.0	1.9	1.9	905	2.0	2.1	6	78.9	0.71	57	25.5	0.00414
4	IE3-90L-6	1.1	2.8	2.7	2.6	905	2.0	2.1	6	81	0.73	57	31	0.00576
5	IE3-100L-6	1.5	3.8	3.6	3.5	920	2.0	2.1	6.5	82.5	0.73	61	39	0.01164
6	IE3-112M-6	2.2	5.4	5.1	4.9	935	2.0	2.1	6.6	84.3	0.74	65	49	0.01643
7	IE3-132S-6	3	7.2	6.8	6.6	960	2.0	2.1	6.8	85.6	0.74	69	65	0.03459
8	IE3-132M1-6	4	9.5	9.0	8.7	960	2.0	2.1	6.8	86.8	0.74	69	74	0.04286
9	IE3-132M2-6	5.5	12.7	12.0	11.6	960	2.0	2.1	7	88	0.75	69	81.5	0.05374
10	IE3-160M-6	7.5	16.2	15.4	14.8	970	2.0	2.1.	7	89.1	0.79	73	124	0.10643
11	IE3-160L-6	11	23.1	22.0	21.2	970	2.0	2.1	7.2	90.3	0.8	73	160	0.14027
12	IE3-180L-6	15	30.9	29.3	28.2	970	2.0	2.1	7.3	91.2	0.81	73	211	0.25043
13	IE3-200L1-6	18.5	37.8	36.0	34.7	980	2.0	2.1	7.3	91.7	0.81	73	260	0.36989
14	IE3-200L2-6	22	44.8	42.5	41.0	980	2.0	2.1	7.4	92.2	0.81	74	282	0.42070
15	IE3-225M-6	30	59.1	56.2	54.1	980	2.0	2.1	6.9	92.9	0.83	76	392	0.62360
16	IE3-250M-6	37	71.7	68.1	65.7	980	2.0	2.1	7.1	93.3	0.84	78	416	0.96853
17	IE3-280S-6	45	85.8	81.6	78.6	980	2.0	2.0	7.3	93.7	0.85	78	522	1.91187
18	IE3-280M-6	55	103.3	98.1	94.6	980	2.0	2.0	7.3	94.1	0.86	83	585	2.34111
19	IE3-315S-6	75	143.4	136.2	131.3	985	2.0	2.0	6.6	94.6	0.84	83	791	4.58265
20	IE3-315M-6	90	169.5	161.0	155.2	985	2.0	2.0	6.7	94.9	0.85	83	901	5.32970
21	IE3-315L1-6	110	206.8	196.4	189.3	985	2.0	2.0	6.7	95.1	0.85	83	1009	6.07675
22	IE3-315L2-6	132	244.5	232.2	223.8	985	1.8	2.0	6.8	95.4	0.86	85	1102	6.82380
23	IE3-355M1-6	160	295.7	280.9	270.7	990	1.8	2.0	6.8	95.6	0.86	85	1492	10.59250
24	IE3-355M2-6	200	364.6	346.4	333.8	990	1.6	2.0	6.8	95.8	0.87	85	1630	11.59600
25	IE3-355L-6	250	455.7	433.0	417.3	990	1.6	2.0	6.8	95.8	0.87	85	1810	13.82600

TECHNICAL DATA OF IE3 SERIES

	Franme reference and size	Rated power	Full load current at rated voltage			Full load sreed in revolutions per minute	Direct on ine starting torque ratio	Direct on linepull out torque ratio	Diect on linestarting current ratio	Efficiency	Power factor	Meansound pressure level @1mon noload	Weight	Rotor inertia WK²
NO.	Type	Power	Amps (A)			Speed	LRT/RLT	BDT/RLT	LRA/RLA	η	Power factor	Noise LwdB(A)	Weight	J
		kW	380V	400V	415V	r/min				(%)	(cosΦ)		kg	kgm²
1	IE3-80M1-8	0.18	0.8	0.7	0.7	646	1.8	1.9	3.3	58.7	0.61	52	17.25	0.00283
2	IE3-80M2-8	0.25	1.0	0.9	0.9	645	1.8	1.9	3.3	64.1	0.61	52	18.5	0.00339
3	IE3-90S-8	0.37	1.3	1.3	1.2	675	1.8	1.9	4	69.3	0.61	56	23	0.00576
4	IE3-90L-8	0.55	1.9	1.8	1.7	680	1.8	2	4	73	0.61	56	26.5	0.00735
5	IE3-100L1-8	0.75	2.3	2.2	2.1	680	1.8	2	4	75	0.67	59	33.5	0.01017
6	IE3-100L2-8	1.1	3.1	3.0	2.9	680	1.8	2	5	77.7	0.69	59	35.6	0.01243
7	IE3-112M-8	1.5	4.1	3.9	3.7	690	1.8	2	5	79.7	0.7	61	47.5	0.02769
8	IE3-132S-8	2.2	5.7	5.5	5.3	710	1.8	2	6	81.9	0.71	64	70.5	0.03548
9	IE3-132M-8	3	7.5	7.1	6.8	710	1.8	2	6	83.5	0.73	64	85	0.04464
10	IE3-160M1-8	4	9.8	9.3	9.0	720	1.9	2	6	84.8	0.73	68	120	0.08509
11	IE3-160M2-8	5.5	13.1	12.4	12.0	720	1.9	2	6	86.2	0.74	68	134	0.1052
12	IE3-160L-8	7.5	17.4	16.5	15.9	720	1.9	2	6	87.3	0.75	68	160	0.1424
13	IE3-180L-8	11	25.2	23.9	23.0	730	2	2	6.5	88.6	0.75	70	212	0.2294
14	IE3-200L-8	15	33.5	31.8	30.6	730	2	2	6.6	89.6	0.76	73	271.5	0.3831
15	IE3-225S-8	18.5	41.0	39.0	37.6	730	1.9	2	6.6	90.1	0.76	73	315	0.5548
16	IE3-225M-8	22	47.3	44.9	43.3	730	1.9	2	6.6	90.6	0.78	73	334	0.6181
17	IE3-250M-8	30	63.2	60.0	57.9	735	1.9	2	6.5	91.3	0.79	75	426	0.9424
18	IE3-280S-8	37	77.5	73.6	71.0	740	1.9	2	6.6	91.8	0.79	76	561	1.8645
19	IE3-280M-8	45	93.9	89.2	86.0	740	1.9	2	6.6	92.2	0.79	76	648	2.1809
20	IE3-315S-8	55	111.5	106.0	102.1	735	1.8	2	6.6	92.5	0.81	82	980	5.4127
21	IE3-315M-8	75	151.1	143.6	138.4	735	1.8	2	6.2	93.1	0.81	82	1073	6.3054
22	IE3-315L1-8	90	178.5	169.6	163.5	735	1.8	2	6.4	93.4	0.82	82	1182	7.1981
23	IE3-315L2-8	110	217.5	206.6	199.2	735	1.8	2	6.4	93.7	0.82	82	1285	8.1699
24	IE3-355M1-8	132	260.2	247.2	238.3	740	1.8	2	6.4	94	0.82	90	2300	8.927
25	IE3-355M2-8	160	314.4	298.7	287.9	740	1.8	2	6.4	94.3	0.82	90	2473	11.639
26	IE3-355L-8	200	387.0	367.7	354.4	740	1.8	2	6.4	94.6	0.83	90	2588	13.899

MOUNTING DATA FOR IE3

80-355

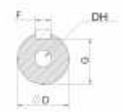

80-355

FRAME WITH FEET AND END-SHIELD WITHOUT FLANGE(IM B3)

FRAME SIZE	POLES	A	A/2	B	C	D	E	F	G	H	K	AB	AC	AD	HD	L	DH*
80M	2 4 6	125	62.5	100	50	19	40	6	15.5	80	10	165	158	140	220	300	M6X16
90S	2 4 6	140	70	100	56	24	50	8	20	90	10	180	177	160	255	350	M8X19
90L	2 4 6	140	70	125	56	24	50	8	20	90	10	180	177	160	255	385	M8X19
10l	2 4 6	160	80	140	63	28	60	8	24	100	12	205	198	172	270	400	M10X22
112M	2 4 6	190	95	140	70	28	60	8	24	112	12	226	235	193	300	425	M10X22
132S	2 4 6	216	108	140	89	38	80	10	33	132	12	262	293	225	349	502	M12X28
132M	2 4 6	216	108	178	89	38	80	10	33	132	12	262	293	225	349	533	M12X28
160M	2 4 6	254	127	210	108	42	110	12	37	160	15	320	315	255	420	660	M16X36
160L	2 4 6	254	127	254	108	42	110	12	37	160	15	320	315	255	420	730	M16X36
180M	2 4 6	279	139.5	241	121	48	110	14	42.5	180	15	355	355	280	455	740	M16X36
180L	2 4 6	279	139.5	279	121	48	110	14	42.5	180	15	355	355	280	455	810	M16X36
200L	2 4 6	318	159	305	133	55	110	16	49	200	19	395	397	305	505	852	M20X42
225S	4	356	178	286	149	60	140	18	53	225	19	435	445	335	560	874	M20X42
225M	2	356	178	311	149	55	110	16	49	225	19	435	445	335	560	890	M20X42
	4 6	356	178	311	149	60	140	18	53	225	19	435	445	335	560	915	M20X42
250M	2	406	203	349	168	60	140	18	53	250	24	490	485	370	615	985	M20X42
	4 6	406	203	349	168	65	140	18	58	250	24	490	485	370	615	985	M20X42
280S	2	457	228.5	368	190	65	140	18	58	280	24	550	547	410	680	1045	M20X42
	4 6	457	228.5	368	190	75	140	20	67.5	280	24	550	547	410	680	1045	M20X42
280M	2	457	228.5	419	190	65	140	18	58	280	24	550	547	410	680	1095	M20X42
	4 6	457	228.5	419	190	75	140	20	67.5	280	24	550	547	410	680	1095	M20X42
315S	2	508	254	406	216	65	140	18	58	315	28	635	620	530	845	1185	M20X42
	4 6	508	254	406	216	80	170	22	71	315	28	635	620	530	845	1220	M20X42
315M	2	508	254	457	216	65	140	18	58	315	28	635	620	530	845	1290	M20X42
	4 6	508	254	457	216	80	170	22	71	315	28	635	620	530	845	1325	M20X42
315L	2	508	254	508	216	65	140	18	58	315	28	635	620	530	845	1290	M20X42
	4 6	508	254	508	216	80	170	22	71	315	28	635	620	530	845	1325	M20X42
355M	2	610	305	560	254	75	140	20	67.5	355	28	730	698	655	1010	1500	M20X42
	4 6	610	305	560	254	95	170	25	86	355	28	730	698	655	1010	1530	M20X42
355L	2	610	305	630	254	75	140	20	67.5	355	28	730	698	655	1010	1500	M20X42
	4 6	610	305	630	254	95	170	25	86	355	28	730	698	655	1010	1530	M20X42

MOUNTING DATA FOR IE3

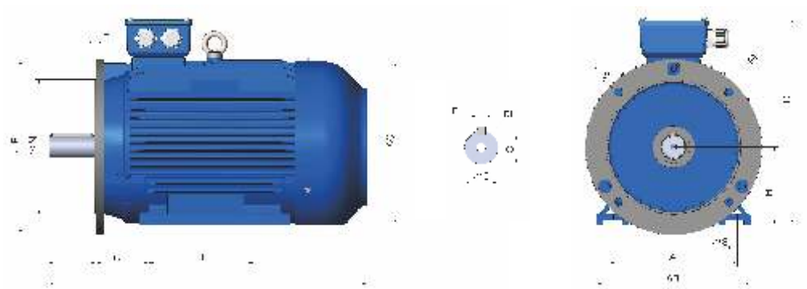

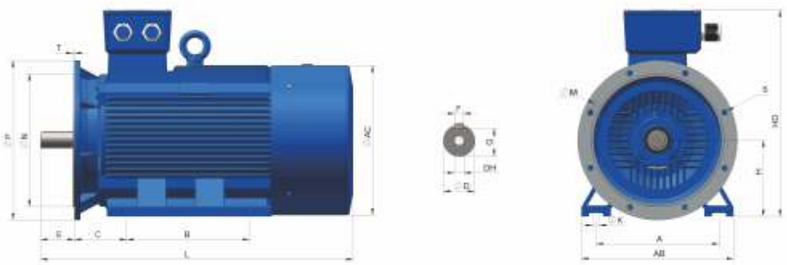

FRAME WITH FEET AND END-SHIELD WITH FLANGE(IM B35)

FRAME SIZE	POLES	A	A/2	B	C	D	E	F	G	H	K	M	N	P	S	T	FLANGE HOLES	AB	AC	AD	HD	L	DH*
80M	2 4 6	125	62.5	100	50	19	40	60	15.5	80	10	165	130	200	12	3.5	4	165	158	140	220	300	M6X16
90S	2 4 6	140	70	100	56	24	50	8	20	90	10	165	130	200	12	3.5	4	180	177	160	255	350	M8X19
90L	2 4 6	140	70	125	56	24	50	8	20	90	10	165	130	200	12	3.5	4	180	177	160	255	385	M8X19
100L	2 4 6	160	80	140	63	28	60	8	24	100	12	215	180	250	15	4	4	205	198	172	270	400	M10X22
112M	2 4 6	190	95	140	70	28	60	8	24	112	12	215	180	250	15	4	4	226	235	193	300	425	M10X22
132S	2 4 6	216	108	140	89	38	80	10	33	132	12	265	230	300	15	4	4	262	293	225	349	502	M12X28
132M	2 4 6	216	108	178	89	38	80	10	33	132	12	265	230	300	15	4	4	262	293	225	349	533	M12X28
160M	2 4 6	254	127	210	108	42	110	12	37	160	15	300	250	350	19	5	4	320	315	255	420	660	M16X36
160L	2 4 6	254	127	254	108	42	110	12	37	160	15	300	250	350	19	5	4	320	315	255	420	730	M16X36
180M	2 4 6	279	139.5	241	121	48	110	14	42.5	180	15	300	250	350	19	5	4	355	355	280	455	740	M16X36
180L	2 4 6	279	139.5	279	121	48	110	14	42.5	180	15	300	250	350	19	5	4	355	355	280	455	810	M16X36
200L	2 4 6	318	159	305	133	55	110	16	49	200	19	350	300	400	19	5	4	395	397	305	505	852	M20X42
225S	4	356	178	286	149	60	140	18	53	225	19	400	350	450	19	5	8	435	445	335	560	874	M20X42
225M	2	356	178	311	149	55	110	16	49	225	19	400	350	450	19	5	8	435	445	335	560	890	M20X42
	4 6	356	178	311	149	60	140	18	53	225	19	400	350	450	19	5	8	435	445	335	560	915	M20X42
250M	2	406	203	349	168	60	140	18	53	250	24	500	450	550	19	5	8	490	485	370	615	985	M20X42
	4 6	406	203	349	168	65	140	18	58	250	24	500	450	550	19	5	8	490	485	370	615	985	M20X42
280S	2	457	228.5	368	190	65	140	18	58	280	24	500	450	550	19	5	8	550	547	410	680	1045	M20X42
	4 6	457	228.5	368	190	75	140	20	67.5	280	24	500	450	550	19	5	8	550	547	410	680	1045	M20X42
280M	2	457	228.5	419	190	65	140	18	58	280	24	500	450	550	19	5	8	550	547	410	680	1095	M20X42
	4 6	457	228.5	419	190	75	140	20	67.5	280	24	500	450	550	19	5	8	550	547	410	680	1095	M20X42
315S	2	508	254	406	216	65	140	18	58	315	28	600	550	660	24	6	8	635	620	530	845	1185	M20X42
	4 6	508	254	406	216	80	170	22	71	315	28	600	550	660	24	6	8	635	620	530	845	1220	M20X42
315M	2	508	254	457	216	65	140	18	58	315	28	600	550	660	24	6	8	635	620	530	845	1290	M20X42
	4 6	508	254	457	216	80	170	22	71	315	28	600	550	660	24	6	8	635	620	530	845	1325	M20X42
315L	2	508	254	508	216	65	140	18	58	315	28	600	550	660	24	6	8	635	620	530	845	1290	M20X42
	4 6	508	254	508	216	80	170	22	71	315	28	600	550	660	24	6	8	635	620	530	845	1325	M20X42
355M	2	610	305	560	254	75	140	20	67.5	355	28	740	680	800	24	6	8	730	698	655	1010	1500	M20X42
	4 6	610	305	560	254	95	170	25	86	355	28	740	680	800	24	6	8	730	698	655	1010	1530	M20X42
355L	2	610	305	630	254	75	140	20	67.5	355	28	740	680	800	24	6	8	730	698	655	1010	1500	M20X42
	4 6	610	305	630	254	95	170	25	86	355	28	740	680	800	24	6	8	730	698	655	1010	1530	M20X42

MOUNTING DATA FOR IE3

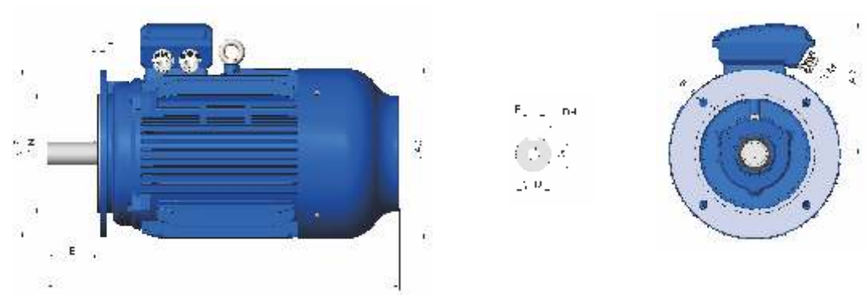

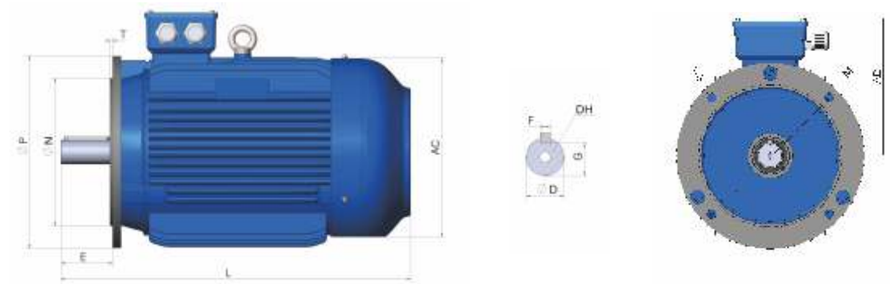

FRAME WITHOUT FEET AND END-SHIELD WITH FLANGE(IM B5)

FRAME SIZE	POLES	D	E	F	G	M	N	P	S	T	FLANGE HOLES	AC	AD	HD	L	DH*
80M	2 4 6	19	40	6	15.5	165	130	200	12	3.5	4	158	140	240	300	M6X16
90S	2 4 6	24	50	8	20	165	130	200	12	3.5	4	177	160	260	350	M8X19
90L	2 4 6	24	50	8	20	165	130	200	12	3.5	4	177	160	260	385	M8X19
100L	2 4 6	28	60	8	24	215	180	250	15	4	4	198	172	300	425	M10X22
112M	2 4 6	28	60	8	24	215	180	250	15	4	4	235	193	315	502	M10X22
132S	2 4 6	38	80	10	33	265	230	300	15	4	4	293	225	349	533	M12X28
132M	2 4 6	38	80	10	33	265	230	300	15	4	4	293	225	349	660	M12X28
160M	2 4 6	42	110	12	37	300	250	350	19	5	4	315	255	385	730	M16X36
160L	2 4 6	42	110	12	37	300	250	350	19	5	4	315	255	385	740	M16X36
180M	2 4 6	48	110	14	42.5	300	250	350	19	5	4	355	280	430	810	M16X36
180L	2 4 6	48	110	14	42.5	300	250	350	19	5	4	355	280	430	852	M16X36
200L	2 4 6	55	110	16	49	350	300	400	19	5	4	397	305	480	874	M20X42
225S	4	60	140	18	53	400	350	450	19	5	8	445	335	535	890	M20X42
225M	2	55	110	16	49	400	350	450	19	5	8	445	335	535	915	M20X42
	4 6	60	140	18	53	400	350	450	19	5	8	445	335	535	985	M20X42
250M	2	60	140	18	53	500	450	550	19	5	8	485	370	595	985	M20X42
	4 6	65	140	18	58	500	450	550	19	5	8	485	370	595	1045	M20X42
280S	2	65	140	18	58	500	450	550	19	5	8	547	410	650	1045	M20X42
	4 6	75	140	20	67.5	500	450	550	19	5	8	547	410	650	1095	M20X42
280M	2	65	140	18	58	500	450	550	19	5	8	547	410	650	1095	M20X42
	4 6	75	140	20	67.5	500	450	550	19	5	8	547	410	650	400	M20X42

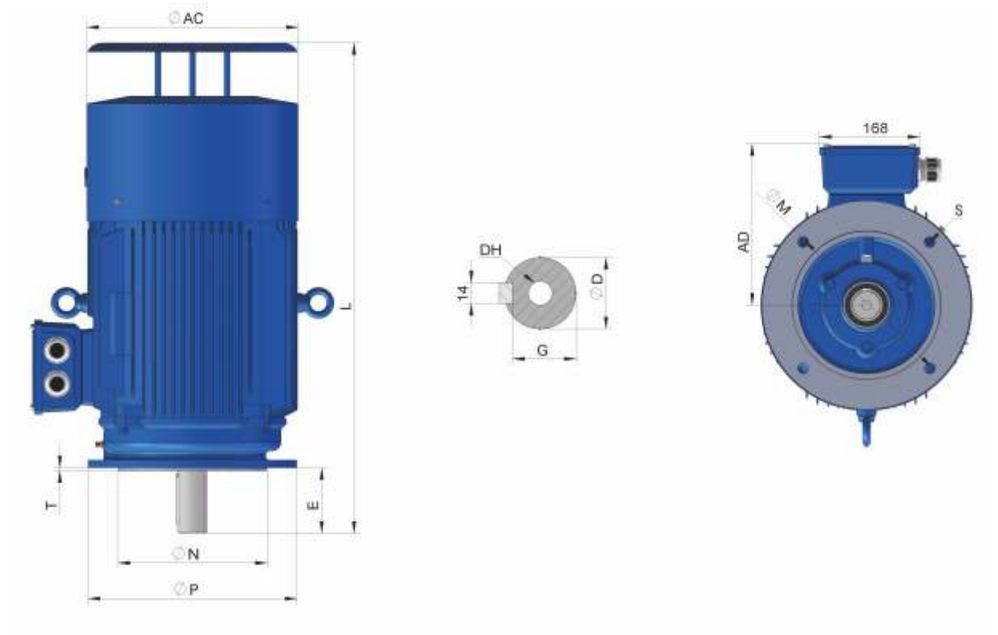

FRAME TYPE, FRAME WITHOUT FEET AND END SHIELD WITH FLANGE (WITH PLAIN HOLES) (IM V1)

FRAME SIZE	POLES	D	E	F	M	N	P	S	T	FLANGE HOLES	AC	AD	HF	L
160M	2 4 6	42	110	12	300	250	350	19	5	4	315	255	455	765
160L	2 4 6	42	110	12	300	250	350	19	5	4	315	255	455	810
180M	2 4 6	48	110	14	300	250	350	19	5	4	355	280	500	870
180L	2 4 6	48	110	14	300	250	350	19	5	4	355	280	500	900
200L	2 4 6	55	110	16	350	300	400	19	5	4	397	305	550	940
225S	4	60	140	18	400	350	450	19	5	8	445	335	610	965
225M	2	55	110	16	400	350	450	19	5	8	445	335	610	985
	4 6	60	140	18	400	350	450	19	5	8	445	335	610	1100
250M	2	60	140	18	500	450	550	19	5	8	485	370	650	1080
	4 6	65	140	18	500	450	550	19	5	8	485	370	650	1080
280S	2	65	140	18	500	450	550	19	5	8	547	410	720	1160
	4 6	75	140	20	500	450	550	19	5	8	547	410	720	1160
280M	2	65	140	18	500	450	550	19	5	8	547	410	720	1200
	4 6	75	140	20	500	450	550	19	5	8	547	410	900	1200
315S	2	65	140	18	600	550	660	24	6	8	620	530	900	1280
	4 6	80	170	22	600	550	660	24	6	8	620	530	900	1510
315M	2	65	140	18	600	550	660	24	6	8	620	530	900	1310
	4 6	80	170	22	600	550	660	24	6	8	620	530	900	1430
315L	2	65	140	18	600	550	660	24	6	8	620	530	900	1310
	4 6	80	170	22	600	550	660	24	6	8	620	530	900	1430
355M	2	75	140	20	740	680	800	24	6	8	698	655	1010	1640
	4 6	95	170	25	740	680	800	24	6	8	698	655	1010	1640
355L	2	75	140	20	740	680	800	24	6	8	698	655	1010	1640
	4 6	95	170	25	740	680	800	24	6	8	698	655	1010	1640

GE3 THREE-PHASE ASYNCHRONOUS MOTOR

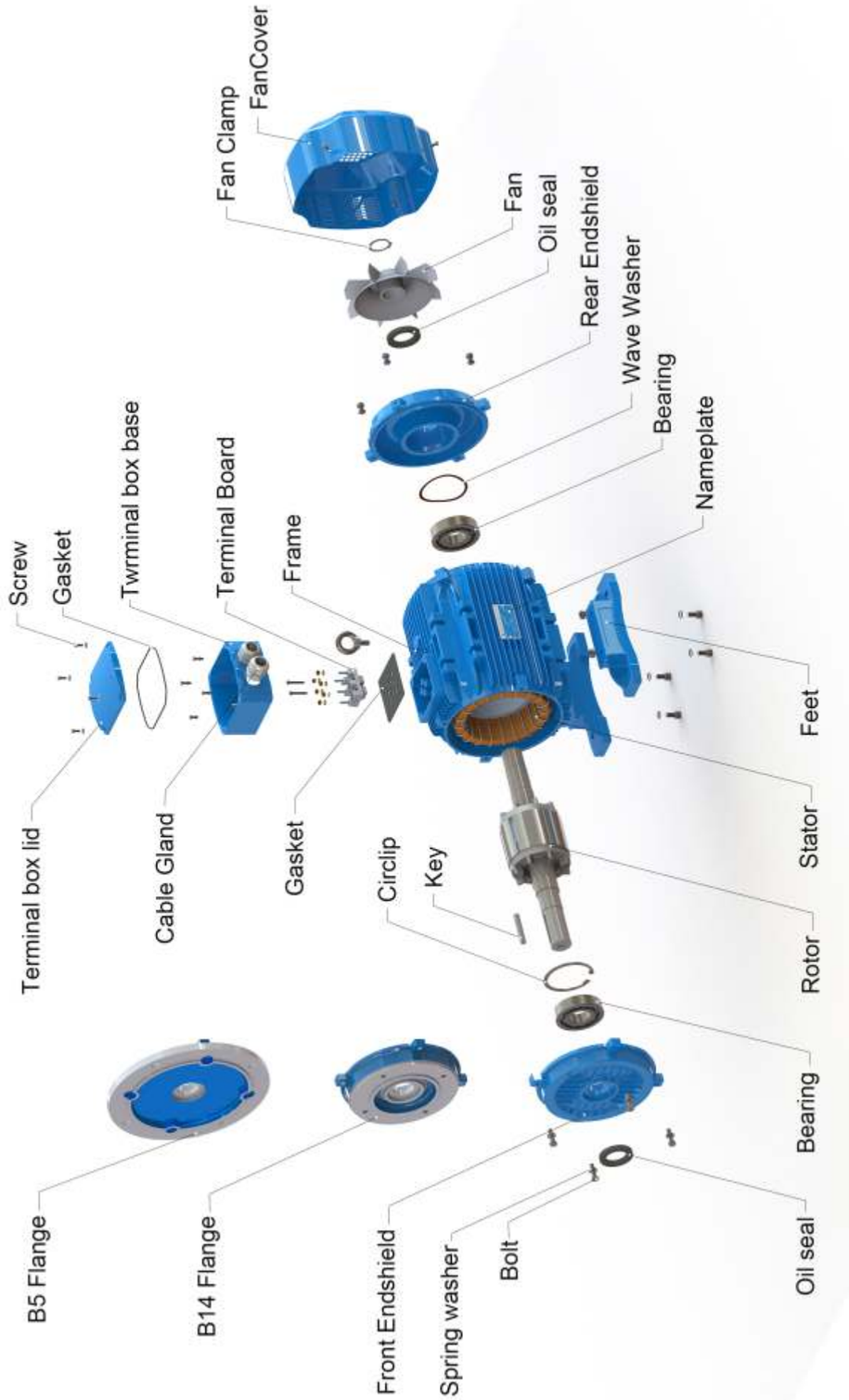

TECHNICAL DATA OF GE3 SERIES

NO.	Franme reference and size	Rated power	Full load current at rated voltage			Full load sreed in revolutions per minute	Direct on ine starting torque ratio	Direct on linepull out torque ratio	Diect on linestarting current ratio	Efficiency	Power factor	Mean sound pressure level @1m on noload	Weight	Rotor inertia WK²
	Type	Power	Amps (A)			Speed	LRT/RLT	BDT/RLT	LRA/RLA	η	Power factor	Noise LwdB(A)	Weight kg	J
		kW	380V	400V	415V	r/min				(%)	(cosΦ)			kgm²
2	GE3–56–2	0.12	0.38	0.37	0.35	2700	2.2	2.1	5.2	60.8	0.78	57	4	0.00023
3	GE3–63M1–2	0.18	0.52	0.49	0.48	2720	2.3	2.3	5.5	65.9	0.8	61	4.5	0.00031
4	GE3–63M2–2	0.25	0.67	0.64	0.62	2720	2.3	2.3	5.5	69.7	0.81	61	4.7	0.0006
5	GE3–71M1–2	0.37	0.94	0.89	0.86	2755	2.2	2.3	6.1	73.8	0.81	64	6	0.00075
6	GE3–71M2–2	0.55	1.31	1.24	1.20	2790	2.3	2.3	6.1	77.8	0.82	64	6.3	0.0009
7	GE3–80M1–2	0.75	1.70	1.62	1.56	2845	2.3	2.2	6.1	80.7	0.83	67	9.5	0.0012
8	GE3–80M2–2	1.1	2.41	2.29	2.20	2835	2.3	2.2	6.9	82.7	0.84	67	10.5	0.0014
9	GE3–90S–2	1.5	3.22	3.06	2.95	2850	2.3	2.2	7	84.2	0.84	72	16	0.0029
10	GE3–90L–2	2.2	4.58	4.35	4.19	2855	2.3	2.2	7	85.9	0.85	72	20	0.0055
11	GE3–100L–2	3	6.02	5.71	5.51	2860	2.3	2.2	7.5	87.1	0.87	76	26	0.0109
12	GE3–112M–2	4	7.84	7.45	7.18	2880	2.3	2.2	7.5	88.1	0.88	77	33.5	0.0126
13	GE3–132S1–2	5.5	10.65	10.11	9.75	2900	2.3	2.2	7.5	89.2	0.88	80	45	0.0377
14	GE3–132S2–2	7.5	14.37	13.65	13.16	2900	2.3	2.2	7.5	90.1	0.88	80	51	0.0499
15	GE3–160M1–2	11	20.59	19.56	18.85	2930	2.3	2.2	7.5	91.2	0.89	86	103	0.055
16	GE3–160M2–2	15	27.86	26.47	25.51	2930	2.3	2.2	7.5	91.9	0.89	86	112.5	0.075
17	GE3–160L–2	18.5	33.80	32.11	30.95	2930	2.3	2.2	7.5	92.4	0.9	86	130	0.124

NO.	Franme reference and size	Rated power	Full load current at rated voltage			Full load sreed in revolutions per minute	Direct on ine starting torque ratio	Direct on linepull out torque ratio	Diect on linestarting current ratio	Efficiency	Power factor	Mean sound pressure level @1m on noload	Weight	Rotor inertia WK²
	Type	Power	Amps (A)			Speed	LRT/RLT	BDT/RLT	LRA/RLA	η	Power factor	Noise LwdB(A)	Weight kg	J
		kW	380V	400V	415V	r/min				(%)	(cosΦ)			kgm²
1	GE3–63M1–4	0.12	0.39	0.37	0.36	1310	2.2	2.1	4.4	64.8	0.72	52	4.5	0.0005
2	GE3–63M2–4	0.18	0.54	0.51	0.49	1310	2.2	2.1	4.4	69.9	0.73	52	4.7	0.0006
3	GE3–71M1–4	0.25	0.70	0.66	0.64	1340	2.2	2.1	5.2	73.5	0.74	55	6	0.0008
4	GE3–71M2–4	0.37	0.97	0.92	0.89	1340	2.2	2.1	5.2	77.3	0.75	55	6.3	0.0013
5	GE3–80M1–4	0.55	1.38	1.31	1.26	1390	2.3	2.4	5.2	80.8	0.75	58	12	0.0018
6	GE3–80M2–4	0.75	1.82	1.73	1.66	1390	2.3	2.3	6	82.5	0.76	58	12.5	0.0021
7	GE3–90S–4	1.1	2.58	2.45	2.36	1390	2.3	2.3	6	84.1	0.77	61	15.5	0.0023
8	GE3–90L–4	1.5	3.43	3.25	3.14	1400	2.3	2.3	6	85.3	0.78	61	19	0.0027
9	GE3–100L1–4	2.2	4.76	4.52	4.36	1420	2.3	2.3	7	86.7	0.81	64	27.5	0.0054
10	GE3–100L2–4	3	6.34	6.02	5.80	1420	2.3	2.3	7	87.7	0.82	64	32	0.0067
11	GE3–112M–4	4	8.37	7.95	7.66	1435	2.3	2.3	7	88.6	0.82	65	39	0.0095
12	GE3–132S–4	5.5	11.24	10.68	10.29	1440	2.3	2.3	7	89.6	0.83	71	55.5	0.0214
13	GE3–132M–4	7.5	15.01	14.26	13.74	1450	2.3	2.3	7	90.4	0.84	71	65	0.0296
14	GE3–160M–4	11	21.51	20.44	19.70	1460	2.3	2.3	7	91.4	0.85	75	107.5	0.0747
15	GE3–160L–4	15	29.11	27.66	26.66	1460	2.3	2.3	7	92.1	0.85	75	125	0.0918

TECHNICAL DATA OF GE3 SERIES

	Franme reference and size	Rated power	Full load current at rated voltage			Full load sreed in revolutions per minute	Direct on ine starting torque ratio	Direct on linepull out torque ratio	Diect on linestarting current ratio	Efficiency	Power factor	Meansound pressurelevel @1mon noload	Weight	Rotor inertia WK²
NO.	Type	Power	Amps (A)			Speed	LRT/RLT	BDT/RLT	LRA/RLA	η	Power factor	Noise	Weight	J
		kW	380V	400V	415V	r/min				(%)	(cosΦ)	LwdB(A)	kg	kgm²
1	GE3-71M1-6	0.18	0.65	0.62	0.59	870	2	1.9	4	63.9	0.66	52	6	0.0011
2	GE3-71M2-6	0.25	0.81	0.77	0.75	870	2	1.9	4	68.6	0.68	52	6.3	0.0014
3	GE3-80M1-6	0.37	1.09	1.04	1.00	880	2	1.9	4.7	73.5	0.7	54	13	0.0016
4	GE3-80M2-6	0.55	1.50	1.43	1.38	880	2.1	1.9	4.7	77.2	0.72	54	14	0.0019
5	GE3-90S-6	0.75	2.01	1.91	1.84	905	2.1	2	5.3	78.9	0.72	57	16	0.0029
6	GE3-90L-6	1.1	2.83	2.69	2.59	905	2.1	2	5.5	81	0.73	57	20.5	0.0035
7	GE3-100L-6	1.5	3.63	3.45	3.33	920	2.1	2	5.5	82.5	0.76	61	26.5	0.0069
8	GE3-112M-6	2.2	5.22	4.96	4.78	935	2.1	2	6.5	84.3	0.76	65	32.5	0.014
9	GE3-132S-6	3	7.01	6.66	6.42	960	2.1	2.1	6.5	85.6	0.76	69	45	0.0286
10	GE3-132M1-6	4	9.21	8.75	8.44	960	2.1	2.1	6.5	86.8	0.76	69	56.5	0.0357
11	GE3-132M2-6	5.5	12.33	11.72	11.29	960	2.1	2.1	6.5	88	0.77	69	63	0.0449
12	GE3-160M-6	7.5	16.40	15.58	15.01	970	2.1	2	6.5	89.1	0.78	73	102.5	0.081
13	GE3-160L-6	11	23.43	22.26	21.45	970	2.1	2	6.5	90.3	0.79	73	116	0.0116

	Franme reference and size	Rated power	Full load current at rated voltage			Full load sreed in revolutions per minute	Direct on ine starting torque ratio	Direct on linepull out torque ratio	Diect on linestarting current ratio	Efficiency	Power factor	Meansound pressurelevel @1mon noload	Weight	Rotor inertia WK²
NO.	Type	Power	Amps (A)			Speed	LRT/RLT	BDT/RLT	LRA/RLA	η	Power factor	Noise	Weight	J
		kW	380V	400V	415V	r/min				(%)	(cosΦ)	LwdB(A)	kg	kgm²
1	GE3-80M1-8	0.18	0.76	0.73	0.70	645	1.9	1.8	3.3	58.7	0.61	52	11.5	0.0025
2	GE3-80M2-8	0.25	0.97	0.92	0.89	645	1.9	1.8	3.3	64.1	0.61	52	12.6	0.003
3	GE3-90S-8	0.37	1.33	1.26	1.22	675	1.9	1.8	4	69.3	0.61	56	15	0.0051
4	GE3-90L-8	0.55	1.88	1.78	1.72	680	2	1.8	4	73	0.61	56	17.2	0.0065
5	GE3-100L1-8	0.75	2.27	2.15	2.08	680	2	1.8	4	75	0.67	59	26.5	0.0095
6	GE3-100L2-8	1.1	3.12	2.96	2.85	680	2	1.8	5	77.7	0.69	59	29	0.011
7	GE3-112M-8	1.5	4.09	3.88	3.74	690	2	1.8	5	79.7	0.7	61	32.5	0.0245
8	GE3-132S-8	2.2	5.75	5.46	5.26	710	2	1.8	6	81.9	0.71	64	46	0.0314
9	GE3-132M-8	3	7.48	7.10	6.85	710	2	1.8	6	83.5	0.73	64	52	0.0395
10	GE3-160M1-8	4	9.82	9.33	8.99	720	2	1.9	6	84.8	0.73	68	89	0.0753
11	GE3-160M2-8	5.5	13.10	12.45	12.00	720	2	2	6.5	86.2	0.74	68	103	0.0931

MOUNTING DATA FOR GE3

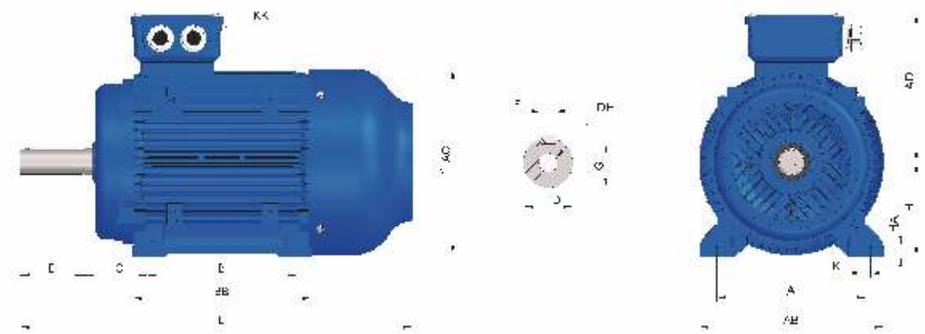

GE3-160

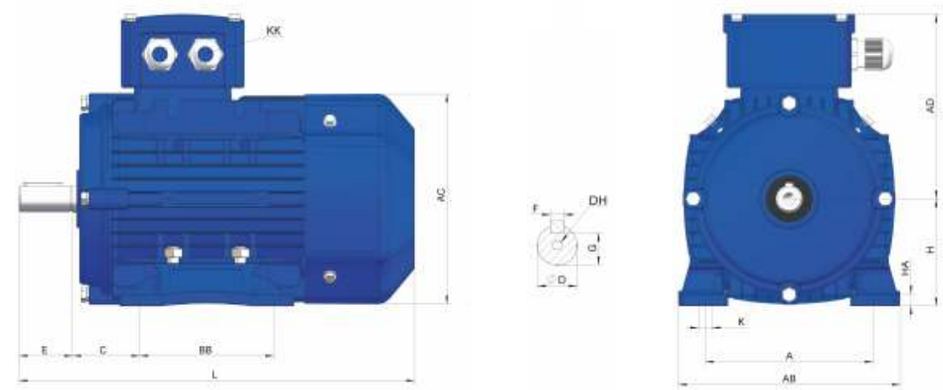

GE3-56-132

FRAME WITH FEET AND END-SHIELD WITHOUT FLANGE(IM B3)

FRAME SIZE	POLES	A	A/2	B	C	D	E	F	G	H	K	AB	AC	AD	HD	L	DH*
56	2 4 6 8	90	45	71	36	9	20	3	7.2	56	5.8	115	110	110	156	199	M4X12
63	2 4 6 8	100	50	80	40	11	23	4	8.5	63	7	137	123	111	174	221	M4X12
71	2 4 6 8	112	56	90	45	14	30	5	1.1	71	7	133	137	127	198	247	M5X12
80M	2 4 6 8	125	62.5	100	50	19	40	6	15.5	80	10	165	158	140	220	295	M6X16
90S	2 4 6 8	140	70	100	56	24	50	8	20	90	10	180	177	160	255	353	M8X19
90L	2 4 6 8	140	70	125	56	24	50	8	20	90	10	180	177	160	255	373	M8X19
10l	2 4 6 8	160	80	140	63	28	60	8	24	100	12	205	198	172	270	433	M10X22
112M	2 4 6 8	190	95	140	70	28	60	8	24	112	12	226	235	193	300	461	M10X22
132S	2 4 6 8	216	108	140	89	38	80	10	33	132	12	262	293	225	349	499	M12X28
132M	2 4 6 8	216	108	178	89	38	80	10	33	132	12	262	293	225	349	521	M12X28
160M	2 4 6 8	254	127	210	108	42	110	12	37	160	15	320	315	255	420	660	M16X36
160L	2 4 6 8	254	127	254	108	42	110	12	37	160	15	320	315	255	420	730	M16X36

MOUNTING DATA FOR GE3

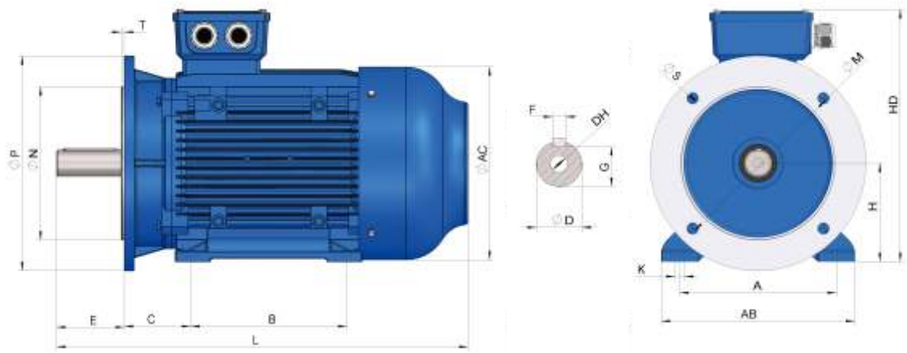

GE3-160

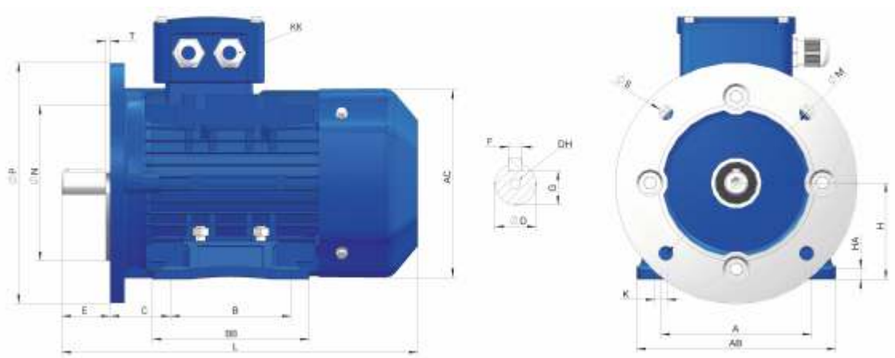

GE3-80-132

FRAME WITH FEET AND END-SHIELD WITH FLANGE(IM B35)

FRAME SIZE	POLES	A	A/2	B	C	D	E	F	G	H	K	M	N	P	S	T	FLANGE HOLES	AB	AC	AD	HD	L	DH*
56	2 4 6 8	90	45	71	36	9	20	3	7.2	56	5.8	100	80	120	7	3	4	115	110	100	156	199	M4X12
63	2 4 6 8	100	50	80	40	11	23	4	8.5	63	7	115	95	140	10	3	4	137	123	111	174	221	M4X12
71	2 4 6 8	112	56	90	45	14	30	5	11	71	7	130	110	160	10	3.5	4	133	137	127	198	247	M5X12
80M	2 4 6 8	125	62.5	100	50	19	40	6	15.5	80	10	165	130	200	12	3.5	4	165	158	140	220	295	M6X16
90S	2 4 6 8	140	70	100	56	24	50	8	20	90	10	165	130	200	12	3.5	4	180	177	160	255	353	M8X19
90L	2 4 6 8	140	70	125	56	24	50	8	20	90	10	165	130	200	12	3.5	4	180	177	160	255	373	M8X19
100L	2 4 6 8	160	80	140	63	28	60	8	24	100	12	215	180	250	15	4	4	205	198	172	270	433	M10X22
112M	2 4 6 8	190	95	140	70	28	60	8	24	112	12	215	180	250	15	4	4	226	235	193	300	461	M10X22
132S	2 4 6 8	216	108	140	89	38	80	10	33	132	12	265	230	300	15	4	4	262	293	225	349	499	M12X28
132M	2 4 6 8	216	108	178	89	38	80	10	33	132	12	265	230	300	15	4	4	262	293	225	349	521	M12X28
160M	2 4 6 8	254	127	210	108	42	110	12	37	160	15	300	250	350	19	5	4	320	315	255	420	660	M16X36
160L	2 4 6 8	254	127	254	108	42	110	12	37	160	15	300	250	350	19	5	4	320	315	255	420	730	M16X36

MOUNTING DATA FOR GE3

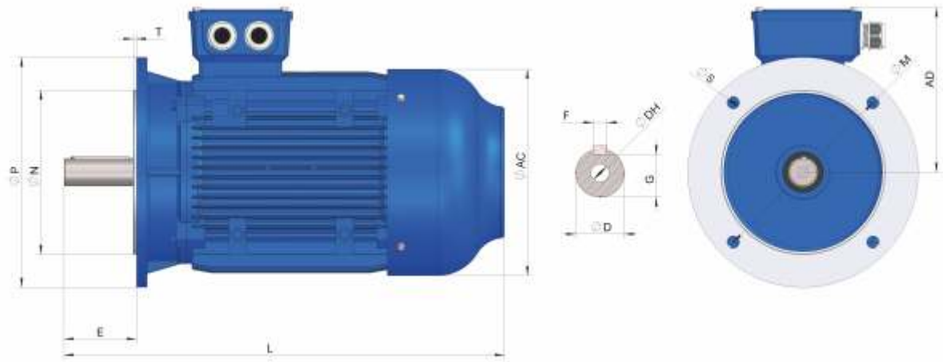

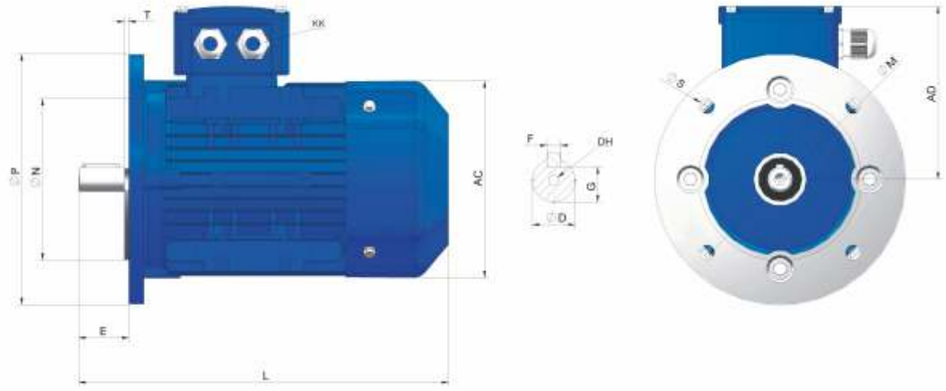

GE3-80-132

FRAME WITHOUT FEET AND END-SHIELD WITH FLANGE(IM B5)

FRAME SIZE	POLES	D	E	F	G	M	N	P	S	T	FLANGE HOLES	AC	AD	L	DH*
56	2 4 6 8	9	20	3	7.2	100	80	120	7	3	4	110	100	199	M4X12
63	2 4 6 8	11	23	4	8.5	115	95	140	10	3	4	120	11	221	M4X12
71	2 4 6 8	14	30	5	11	130	110	160	10	3.5	4	137	127	247	M4X12
80M	2 4 6 8	19	40	6	15.5	165	130	200	12	3.5	4	158	140	295	M6X16
90S	2 4 6 8	24	50	8	20	165	130	200	12	3.5	4	177	160	353	M8X19
90L	2 4 6 8	24	50	8	20	165	130	200	12	3.5	4	177	160	373	M8X19
100L	2 4 6 8	28	60	8	24	215	180	250	15	4	4	198	172	433	M10X22
112M	2 4 6 8	28	60	8	24	215	180	250	15	4	4	235	193	461	M10X22
132S	2 4 6 8	38	80	10	33	265	230	300	15	4	4	293	225	499	M12X28
132M	2 4 6 8	38	80	10	33	265	230	300	15	4	4	293	225	521	M12X28
160M	2 4 6 8	42	110	12	37	300	250	350	19	5	4	315	255	730	M16X36
160L	2 4 6 8	42	110	12	37	300	250	350	19	5	4	315	255	740	M16X36

MOUNTING DATA FOR GE3

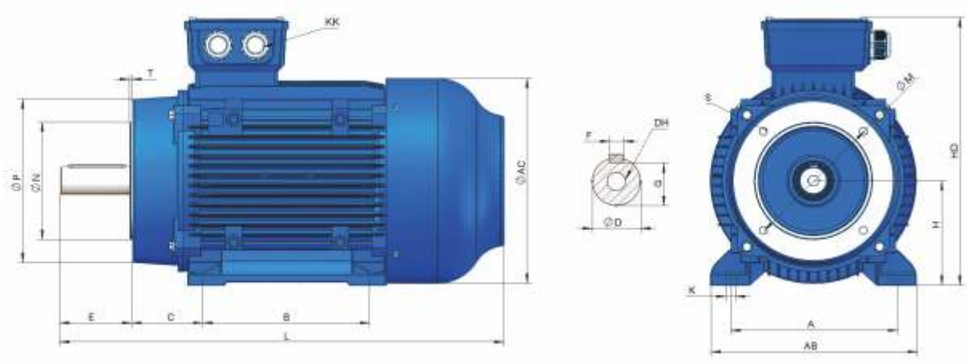

GE3-160

FRAME WITH FEET AND END-SHIELD WITH FLANGE (IM B34)

FRAME SIZE	POLES	A	A/2	B	C	D	E	F	G	H	K	M	N	P	S	T	FLANGE HOLES	AB	AC	AD	HD	L	DH
56	2 4 6 8	90	45	71	36	9	20	3	7.2	56	5.8	65	50	80	M5	3	4	115	110	100	156	199	M4X12
63	2 4 6 8	100	50	80	40	11	23	4	8.5	63	7	75	60	90	M5	3	4	137	123	111	174	221	M4X12
71	2 4 6 8	112	56	90	45	14	30	5	11	71	7	85	70	105	M5	3.5	4	133	137	127	198	247	M5X12
80M	2 4 6 8	125	62.5	100	50	19	40	6	15.5	80	10	100	80	120	M6	3	4	165	158	140	220	295	M6X16
90S	2 4 6 8	140	70	100	56	24	50	8	20	90	10	115	95	140	M6	3	4	180	177	160	255	353	M8X19
90L	2 4 6 8	140	70	125	56	24	50	8	20	90	10	115	95	140	M6	3	4	180	177	160	255	373	M8X19
100L	2 4 6 8	160	80	140	63	28	60	8	24	100	12	130	110	160	M8	3.5	4	205	198	172	270	433	M10X22
112M	2 4 6 8	190	95	140	70	28	60	8	24	112	12	130	110	160	M8	3.5	4	226	235	193	193	461	M10X22
132S	2 4 6 8	216	108	140	89	38	80	10	33	132	12	165	130	200	M10	3.5	4	262	293	225	225	499	M12X28
132M	2 4 6 8	216	108	178	89	38	80	10	33	132	12	165	130	200	M10	3.5	4	262	293	225	225	521	M12X28
160M	2 4 6 8	254	127	210	108	42	110	12	37	160	15	215	180	250	M12	4	4	314	314	255	415	632	M16X36
160L	2 4 6 8	254	127	254	108	42	110	12	37	160	15	215	180	250	M12	4	4	314	314	255	415	677	M16X36

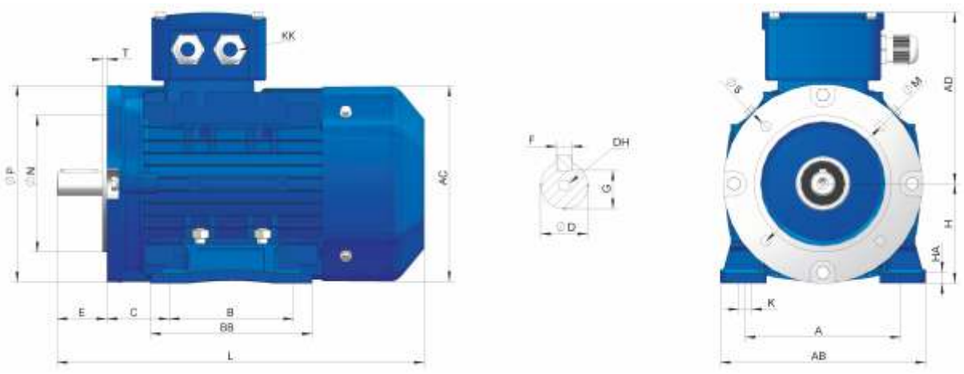

GE3-80-132

MOUNTING DATA FOR GE3

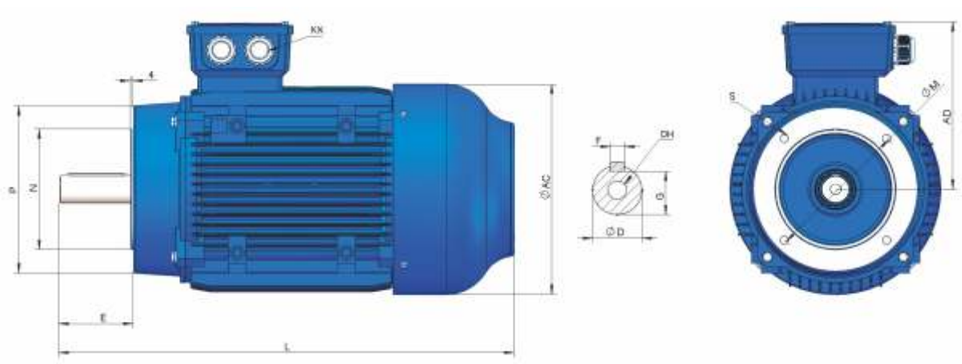

GE3-160

FRAME WITH FEET AND END-SHIELD WITH FLANGE (IM B14)

FRAME SIZE	AC	AD	D	DH	E	F	KK		L	B14A					B14B				
							METRIC	PG		M	N	P	S	T	M	N	P	S	T
56	110	100	9	M4X12	20	3	2-M20X1.5	2-PG13.5	199	65	50	80	M5	2.5	85	70	105	M6	2.5
63	120	109	11	M4X12	23	4	2-M20X1.5	2-PG13.5	221	75	60	90	M5	2.5	100	80	120	M6	2.5
71	137	127	14	M5X12	30	5	2-M20X1.5	2-PG13.5	247	85	70	105	M6	2.5	115	95	140	M8	3
80M	156	138	19	M6X16	40	6	2-M25X1.5	2-PG16	295	100	80	120	M6	3	130	110	160	M8	3.5
90S	177	152	24	M8X19	50	8	2-M25X1.5	2-PG16	353	115	95	140	M8	3	130	110	160	M8	3.5
90L	177	152	24	M8X19	50	8	2-M25X1.5	2-PG16	373	115	95	140	M8	3	130	110	160	M8	3.5
100L	197	160	28	M10X22	60	8	2-M32X1.5	2-PG16	433	130	110	160	M8	3.5	165	130	200	M10	3.5
112M	218	181	28	M10X22	60	8	2-M32X1.5	2-PG16	461	130	110	160	M8	3.5	165	130	200	M10	3.5
132S	258	212	38	M12X28	80	10	2-M32X1.5	2-PG16	499	165	130	200	M10	3.5	215	180	250	M12	4
132M	258	212	38	M12X28	80	10	2-M32X1.5	2-PG16	521	165	130	200	M10	3.5	215	180	250	M12	4
160M	314	255	42	M16X36	110	12	2-M40X1.5	2-PG16	632	215	180	250	M12	4	265	230	300	M16	5
160L	314	255	42	M16X36	110	12	2-M40X1.5	2-PG16	677	215	180	250	M12	4	265	230	300	M16	5

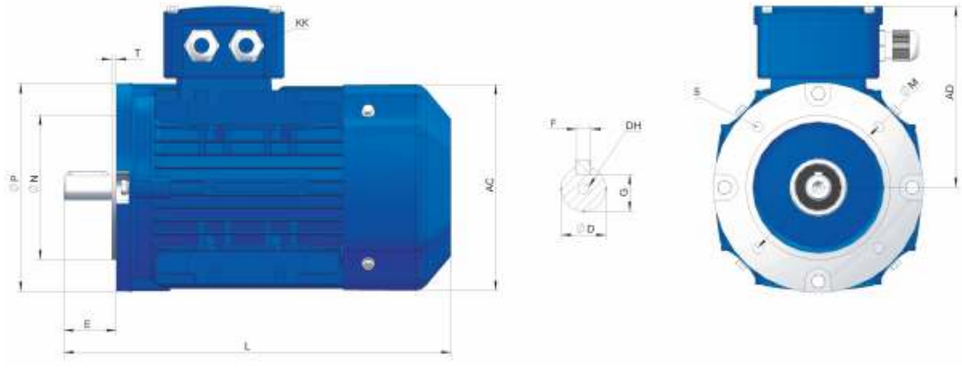

GE3-80-132

GUANGLU

ISO9001 Authentication by EC CE

RAL 6002	RAL 6011	RAL 6004	RAL 6012	RAL 6026
RAL6028	RAL 6032	RAL 6034	RAL 7000	RAL 7010
RAL 7030	RAL 7036	RAL7035	RAL8001	RAL 8012
RAL 8017	RAL 8022	RAL 9006	RAL 9007	RAL9005
RAL 9017	RAL1001	RAL 1003	RAL 1011	RAL 1035
RAL 1034	RAL 2007	RAL 2010	RAL 2012	RAL 2003
RAL 2000	RAL 3001	RAL 3007	RAL 3017	RAL 3026
RAL 4011	RAL 4012	RAL 4003	RAL 4009	RAL 4001
RAL 5018	RAL 5007	RAL 5010	RAL 5017	RAL 5009
RAL 5015	RAL 5014	RAL 5004	RAL 5021	RAL 5019