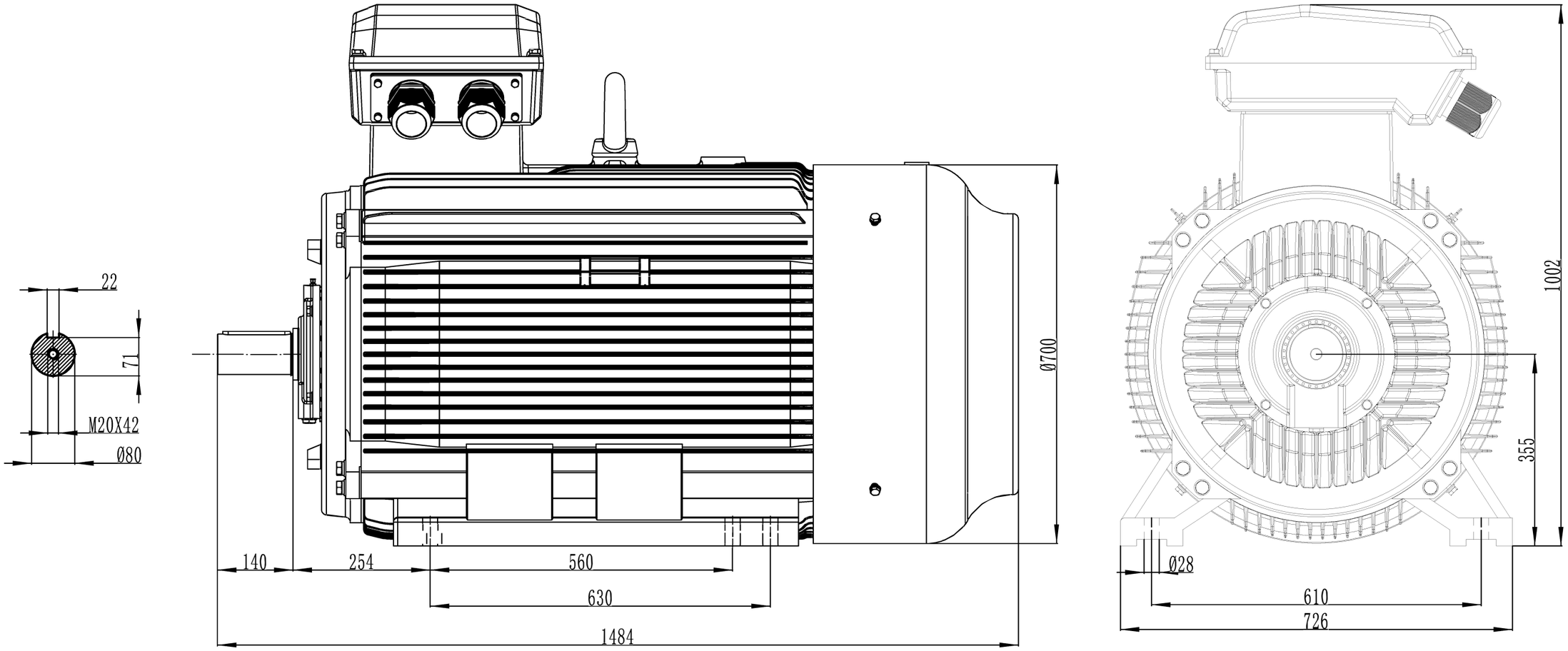

YX3-355L-B3-2

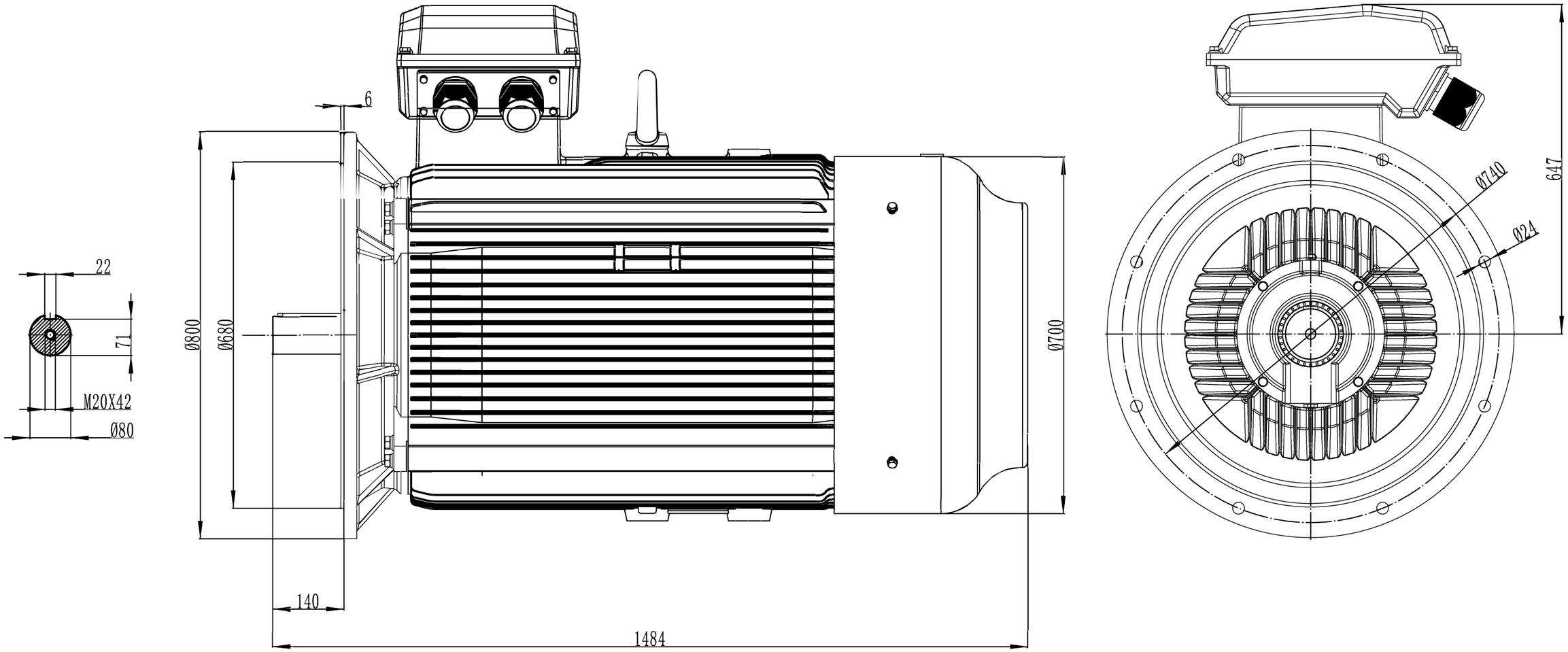

YX3-355L-2-B5

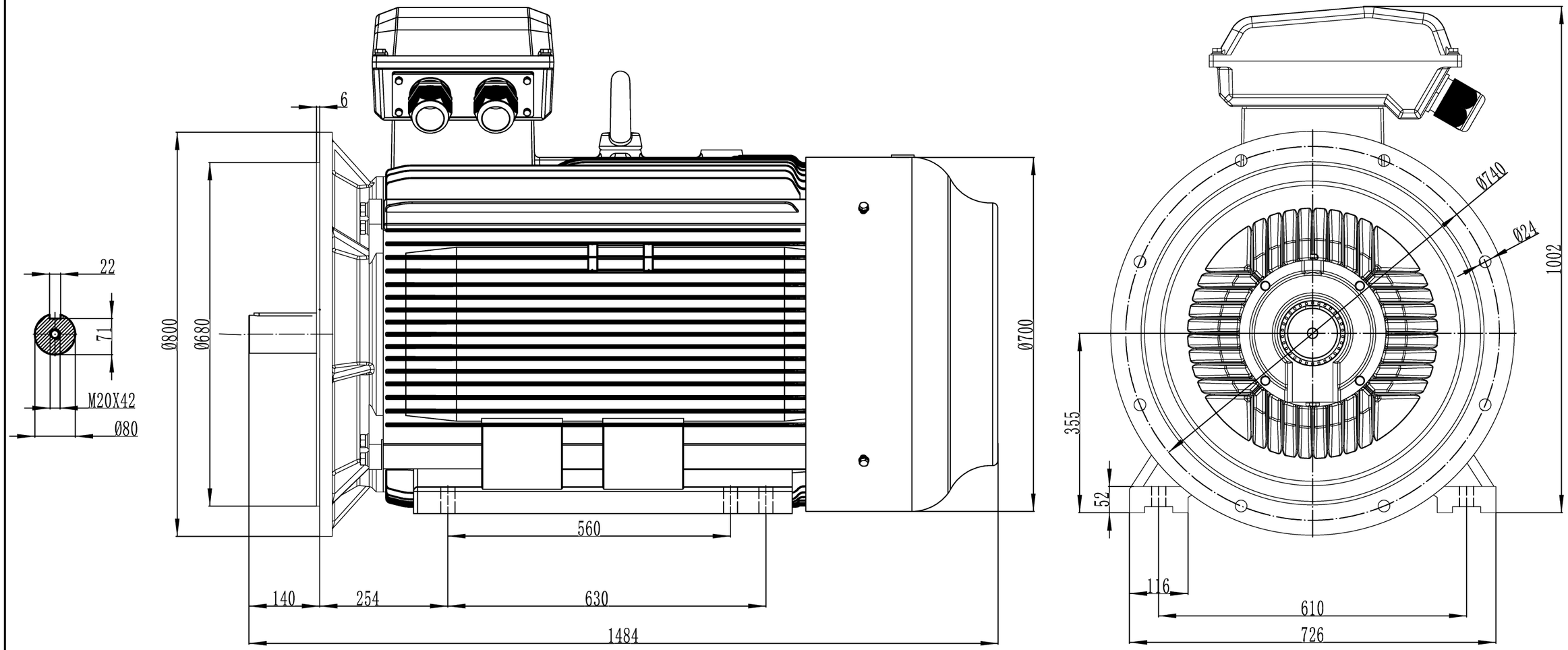

YX3-355L-2-B35