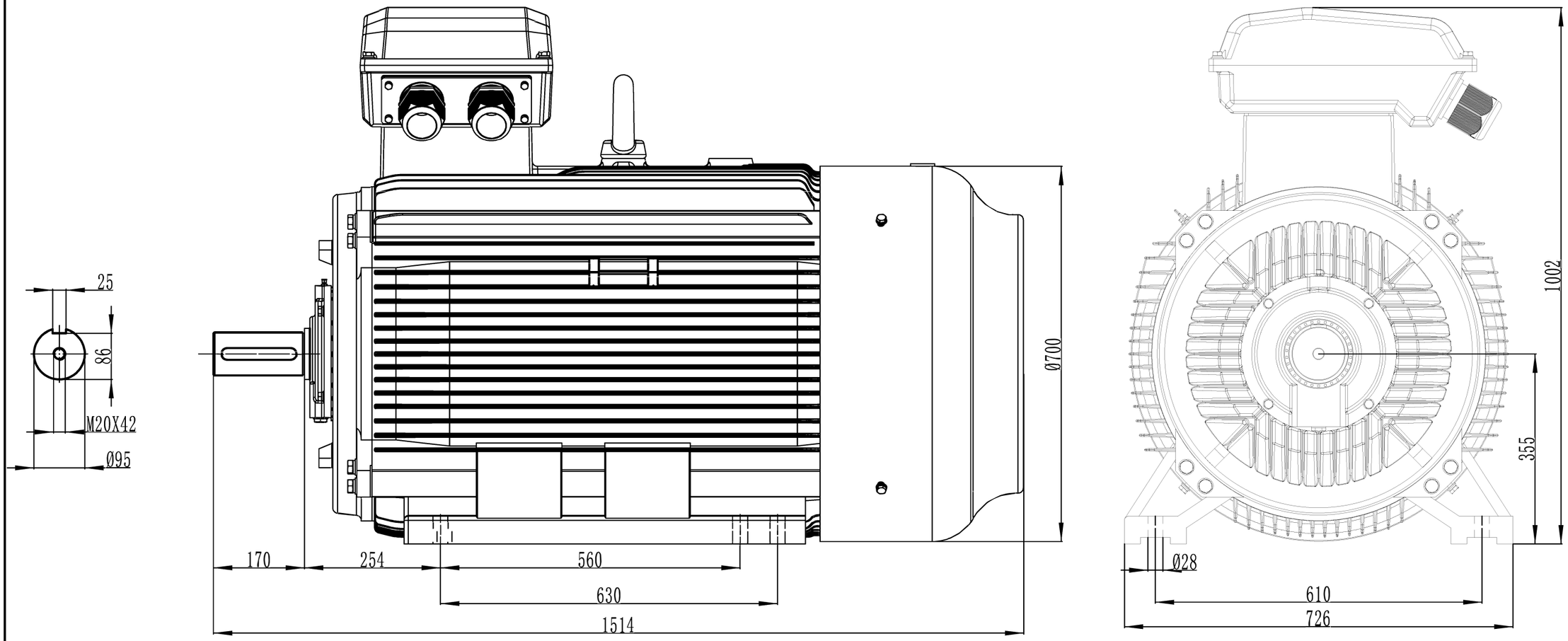

YX3-355L-B3-4

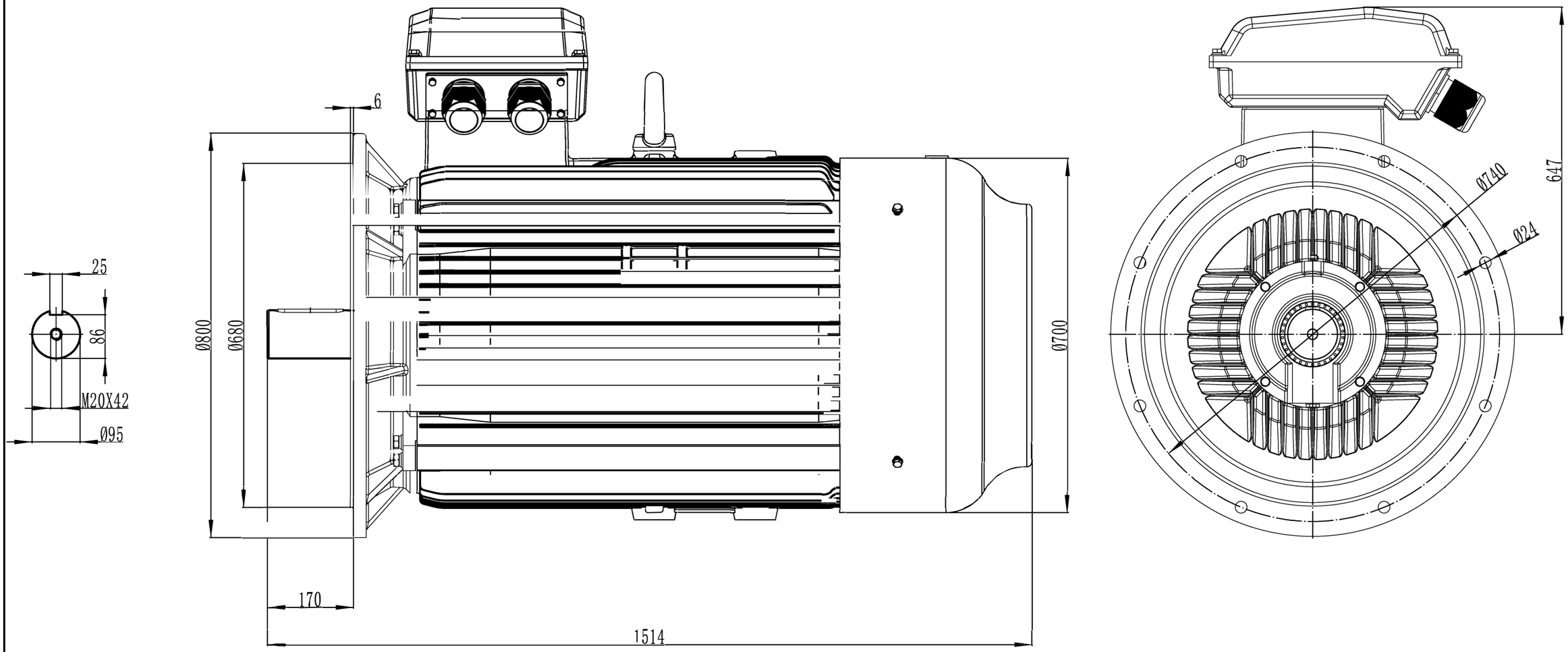

YX3-355L-4-6-B5

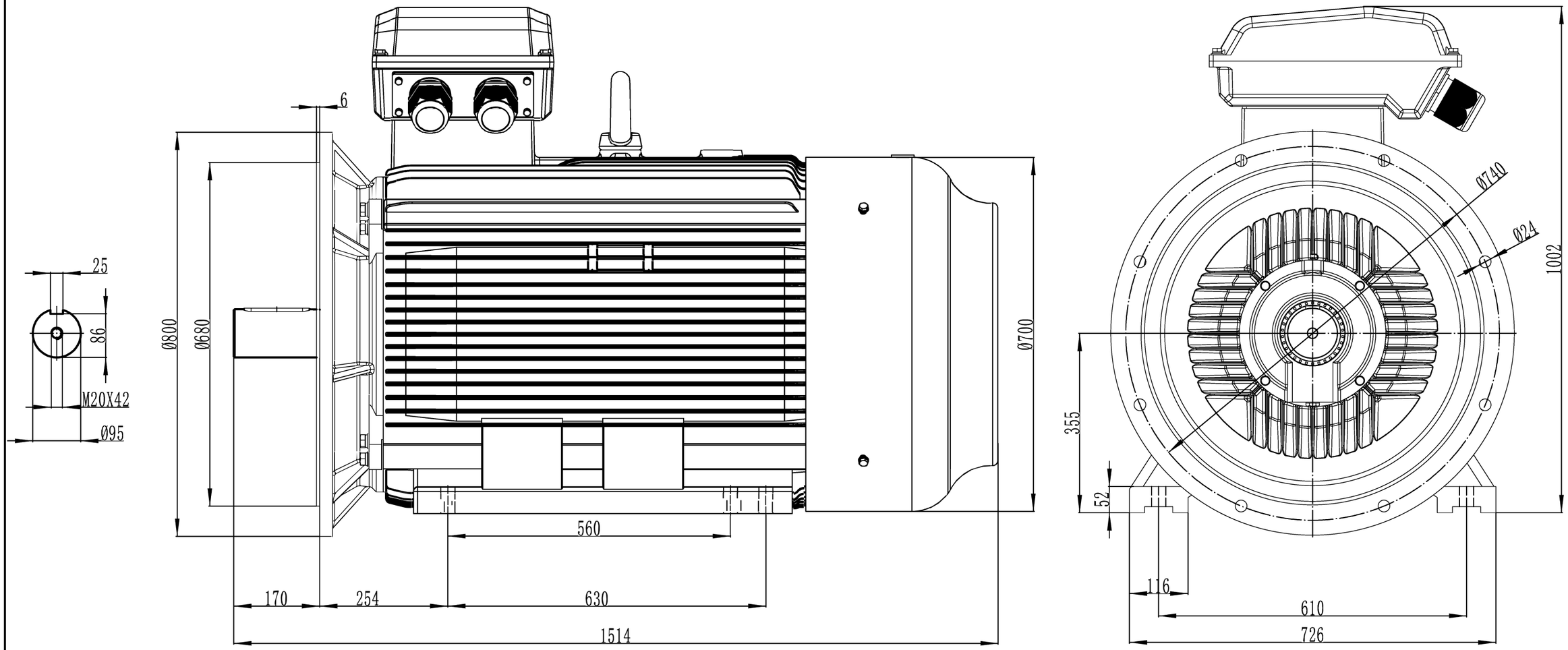

YX3-355L-4-6-B35