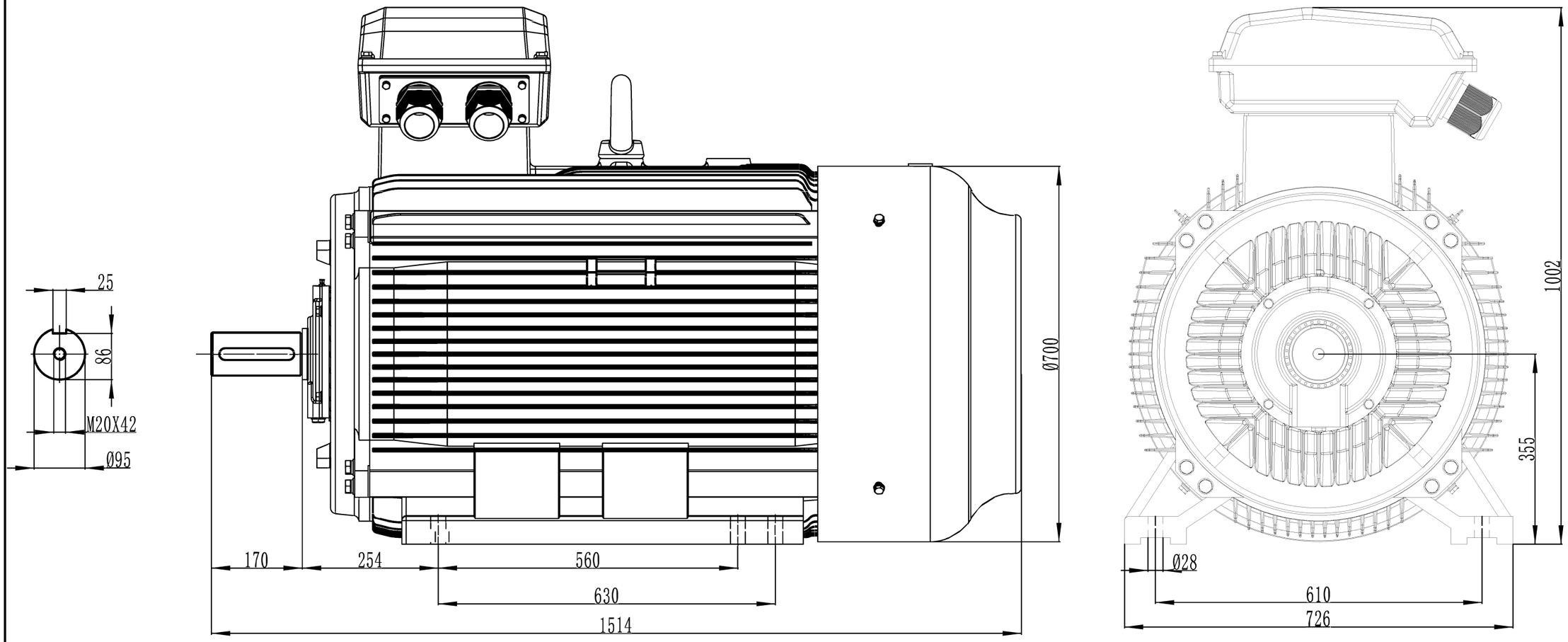

YX3-355M-B3-4

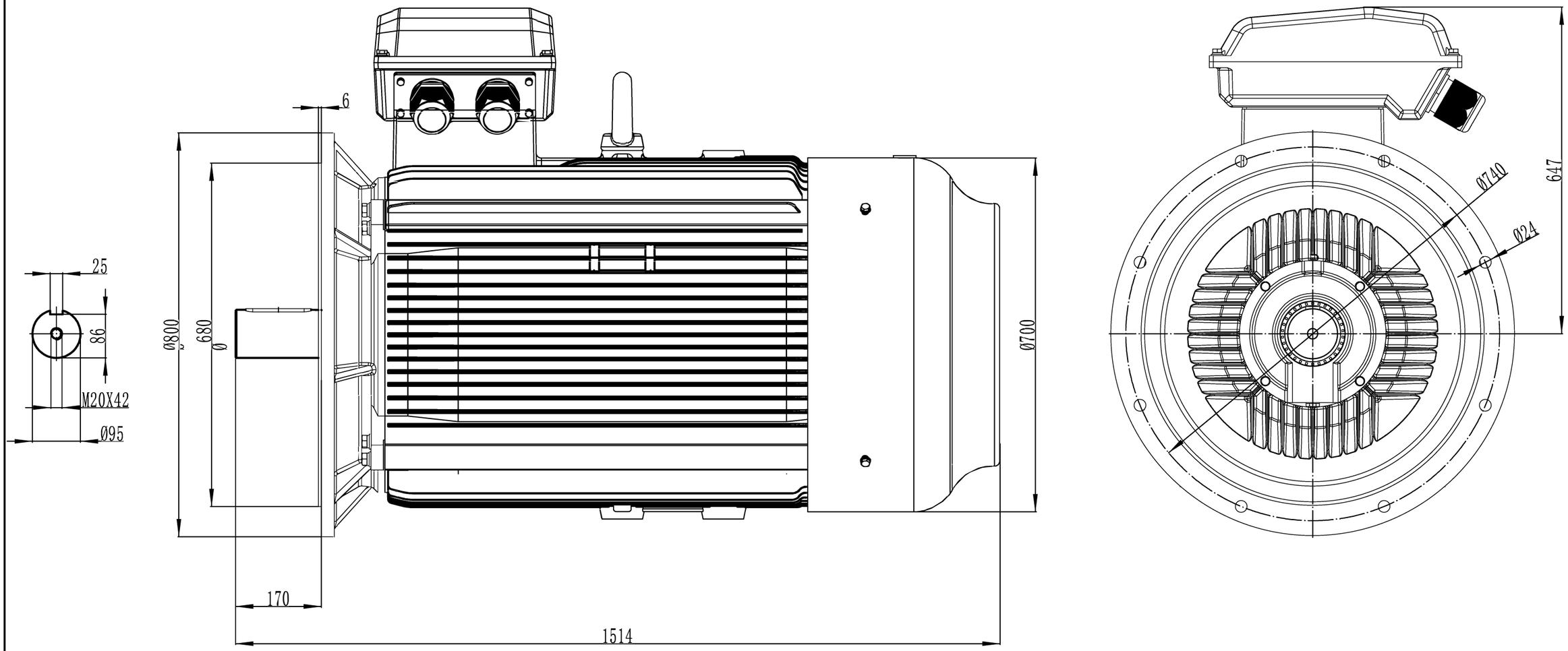

YX3-355M-4-6-B5

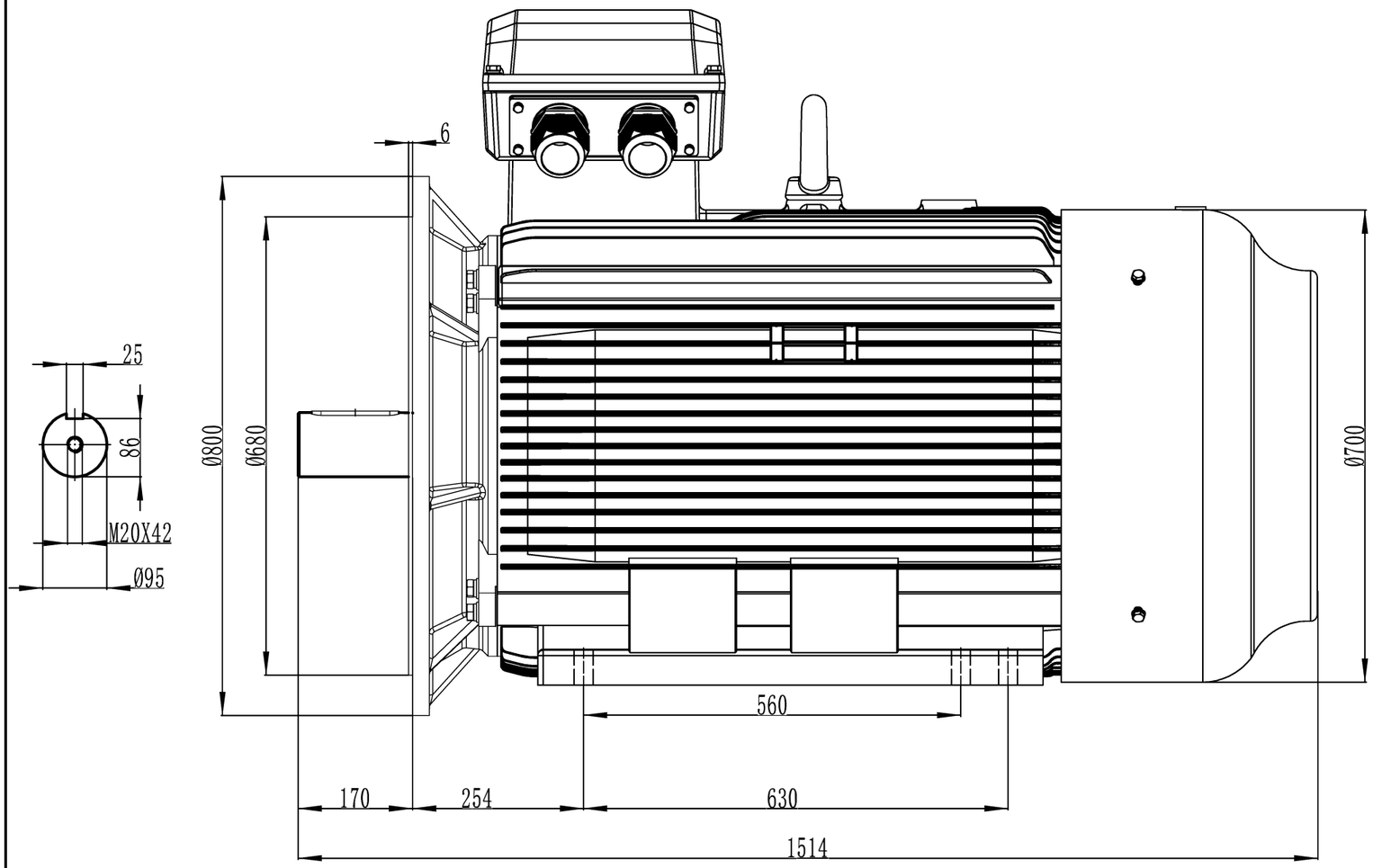

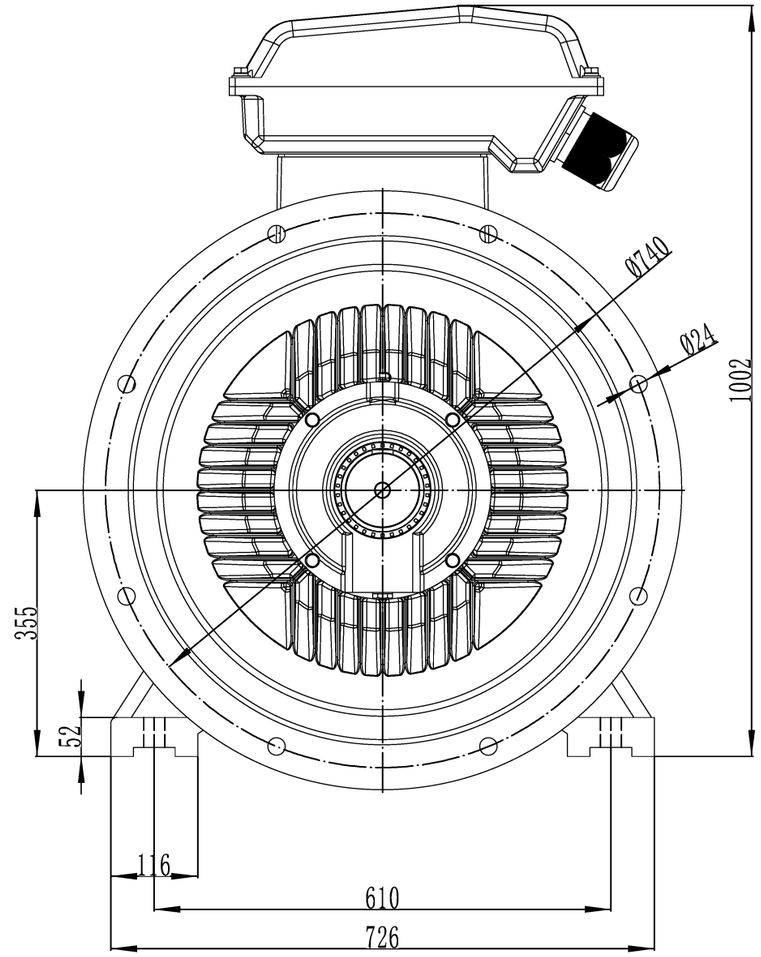

YX3-355M-4-6-B35